**VILLAGE OF LAKE BLUFF**
**COMMITTEE-OF-THE-WHOLE MEETING**
**June 25, 2012**

**DRAFT MINUTES OF MEETING**

The Village of Lake Bluff Board of Trustees met as a Committee-of-the-Whole (COW) in the Village Hall Board Room (40 East Center Avenue) on Monday, June 25, 2012. Village President Letchinger called the meeting to order at 6:02 p.m., and Village Clerk William Meyer called the roll and announced the following were present:

| | |
|---|---|
| Village President: | Christine Letchinger |
| Trustees: | Steve Christensen<br>Mark Dewart<br>John Josephitis<br>Kathleen O'Hara |
| Absent: | Marina Carney, Village Trustee<br>Brian Rener, Village Trustee |
| Also Present: | William Meyer, Village Clerk<br>Drew Irvin, Village Administrator<br>Peter Friedman, Village Attorney<br>Gerald Nellessen, Building Codes Supervisor<br>Janet Nelson, Chair Historic Preservation Commission<br>Brandon Stanick, Assistant to the Village Administrator |

**Non-Agenda Items and Visitors**
President Letchinger stated the COW allocates 15 minutes for those individuals who would like the opportunity to address the Village Board on any matter not listed on the agenda.

There were no requests to address the Board.

**Consideration of the Minutes from the June 11, 2012 Committee-of-the-Whole Meeting**
Trustee Josephitis moved to approve the June 11, 2012 COW Meeting Minutes as presented. Trustee Christensen seconded the motion. The Meeting Minutes were approved on a unanimous voice vote.

**An Informational Report Concerning a Hands Free Device Ordinance**
Village Administrator Drew Irvin advised that Staff is currently investigating the implementation of an administrative adjudication hearing procedure and briefly reviewed documentation from Lake County and the City of Lake Forest concerning their respective administrative adjudication procedures.

**A Report and Presentation from the Historic Preservation Commission (HPC)**
Assistant to the Village Administrator (A to VA) Brandon Stanick stated the purpose for the report is to provide a synopsis of the recent activities of the HPC from January 2010 through April 2012 and report on the following topics:

- An update on the Commission's activities during the reporting period;

- A request to implement a proposed historic preservation incentive program creating additional benefits for landmark homeowners; and
- A request for direction for the upcoming year specific to a list of goals developed by the HPC for the FY12-13 period.

HPC Chair Janet Nelson advised of the landmark designated properties that have been demolished since 2005 and noted the Village Board approved a total of 20 properties, five of which resulted in complete demolition.

HPC Chair Nelson explained the two components of the proposed incentive program:

- Historic Certified Landmark Rehabilitation Grant Program – offers financial incentives to home owners for the rehabilitation and preservation of homes designed as certified Lake Bluff landmarks; and
- Code and Fee Based Incentives for Historic Preservation – establishes incentives that promote the Historic Preservation Program, decrease the cost associated with the rehabilitation of a landmark structure, reward and provide convenience to landmark owners.

Lastly, she stated it was the consensus of the HPC to not pursue the conservation easements incentive since Landmark Illinois, a non-profit organization that currently holds easements of this type, continues to administer and enforce its preservation easement program.

A discussion concerning the proposal from the HPC ensued.

President Letchinger recommended $5,000 be subtracted from the building permit cost. The Village Board expressed interest in identifying which part of a rehabilitation project would be used with the $5,000. She also recommended the proposal be presented to the Finance Committee for consideration.

In response to Trustee O'Hara's comment regarding advertisement, HPC Chair Nelson recommended the Village newsletter and local media be used to advertise the preservation program. President Letchinger suggested developing a newsletter directed solely at preservation. She also suggested the HPC develop street pole banners of local landmark homes.

Trustees Dewart and Christensen suggested the HPC contact homeowners with significant and contributing ratings to share the architectural survey information.

A to VA Stanick reviewed the current Code and fee based incentives for historic preservation.

HPC Chair Nelson reviewed the FY2012-2013 Goals of the HPC:

- Establish and implement the various preservation incentives created by the HPC, as well as continue developing benefits for property owners of landmark designated structures;
- Formulate an all-inclusive list of significant estates and homes the HPC would prefer to have landmark designated and reach out to respective property owners to generate interest; and
- Review the three Terrace subdivisions and prepare for the future of those neighborhoods by studying and formulating landmark designation criteria specific to ranch homes;
- Asses viability of using historic districts as a preservation tool focusing on voluntary designation procedures; and

DRAFT

- Create public relations opportunities to educate Village residents about Lake Bluff history and benefits of historic preservation.

President Letchinger recommended signs be posted at the entrance of several neighborhoods within the Village telling of the area's history.

President Letchinger suggested the incentive program be presented to the Finance Committee, and the HPC develop an advertising plan, design neighborhood signage and present preservation program information to local realtors.

**Adjournment**

As no further business came before the COW, Trustee Dewart moved to adjourn the meeting at 6:54 p.m. Trustee O'Hara seconded the motion. The motion passed on a unanimous voice vote.

Respectfully Submitted,

| | |
|---|---|
| _____ | _____ |
| R. Drew Irvin | William Meyer |
| Village Administrator | Village Clerk |

DRAFT

Agenda Item IVii

# MEMORANDUM

**Date:** January 9, 2013

**To:** Village President and Board of Trustees

**From:** Drew Irvin, Village Administrator

**CC:** Brandon Stanick, Assistant to the Village Administrator
Peter Friedman, Village Attorney
Department Heads

**Subject:** Discussion Regarding Lake Bluff/North Chicago Corridor Agreement

In 1988 the Village of Lake Bluff ("Village") entered into a Boundary Agreement ("Agreement #1") with the City of North Chicago ("City"). Just prior to the April 2, 2008 expiration of Agreement #1 the Village and the City were able to negotiate a new Agreement (Agreement #2) that:

- established understandings with regard to the annexation, municipal jurisdiction, and development of certain specific properties located in the area within the corridor (40-acre parcel, Southern parcels, Arden Shore parcels, Swing parcel, and the Medical School parcel);
- itemized both permitted and prohibited uses, bulk regulations, performance standards, and sales tax sharing for the 40-acre parcel (should the property develop within the City of North Chicago);
- limited the Medical School parcel housing to the extent that any student housing use will not produce an increase in student enrollment at Lake Bluff Elementary School District 65 or Community High School District 115 in excess of the impact that an R-1 development would have on the Districts,
- prescribed a 20-year term which commenced on March 11, 2008; and
- set forth, in the spirit of cooperation, an annual meeting during March of every year to discuss the use and development of the corridor.

Staff anticipates reviewing Agreement #2 with the COW at the upcoming meeting. If you have any questions, please feel free to contact me at (847) 283-6883.

**Attachments:**

1. Resolution Approving a Corridor Agreement between the Village of Lake Bluff and the City of North Chicago; and
2. Corridor Agreement #2 between the Village of Lake Bluff and the City of North Chicago

Attachment 1

**RESOLUTION NO. 2008-13**

**A RESOLUTION APPROVING A CORRIDOR AGREEMENT BETWEEN THE VILLAGE OF LAKE BLUFF AND THE CITY OF NORTH CHICAGO**

**WHEREAS,** the Village and the City of North Chicago ("***North Chicago***") entered into an agreement on January 19, 1988 concerning their respective boundary lines and their jurisdiction regarding the annexation of territory ("***1988 Boundary Agreement***"), which, pursuant to the First Amendment to that Agreement, will expire on April 2, 2008; and

**WHEREAS,** the Village and North Chicago desire to establish and maintain a new agreement with new understandings with regard to the annexation, municipal jurisdiction, and development of certain specific properties located in the area along their common boundaries ("***Lake Bluff – North Chicago Corridor***"); and

**WHEREAS,** officials from North Chicago and the Village have negotiated and prepared a new agreement concerning the Lake Bluff – North Chicago Corridor, which agreement is attached to this Resolution as Exhibit A ("***Corridor Agreement***"); and

**WHEREAS,** North Chicago has approved and executed the Corridor Agreement and has delivered executed copies of the Corridor Agreement to the Village; and

**WHEREAS,** the President and Board of Trustees have determined that the execution of the Corridor Agreement is in the best interests of the Village;

**NOW, THEREFORE, BE IT RESOLVED BY THE PRESIDENT AND BOARD OF TRUSTEES OF THE VILLAGE OF LAKE BLUFF, LAKE COUNTY, ILLINOIS,** as follows:

**Section 1.** **Recitals.** The foregoing recitals are incorporated in this Resolution as findings of the President and Board of Trustees.

**Section 2.** **Approval of the Corridor Agreement.** The Corridor Agreement by and between the Village and North Chicago is hereby approved in substantially the form attached as **Exhibit A.**

**Section 3.** **Execution of the Corridor Agreement.** The Village President and the Village Clerk are hereby authorized and directed to execute and seal the Corridor Agreement on behalf of the Village.

**PASSED** this 10th day of March, 2008, by vote of the Board of Trustees of the Village of Lake Bluff, Illinois, as follows:

**AYES:** (6) Barkhausen, Lesser, O'Hara, Peters, Rener and Surkamer

**NAYS:** (0)

**ABSENT:** (0)

**APPROVED** this 10th day of March, 2008.

Village President

ATTEST:

Village Clerk

**EXHIBIT A**

**Corridor Agreement**

Execution Copy 3/11/08

# LAKE BLUFF – NORTH CHICAGO CORRIDOR AGREEMENT

**THIS INTERGOVERNMENTAL AGREEMENT** is made and entered into as of the 11th day of March, 2008, by and between the **VILLAGE OF LAKE BLUFF**, an Illinois home rule municipal corporation ("***Lake Bluff***"), and the **CITY OF NORTH CHICAGO**, an Illinois home rule municipal corporation ("***North Chicago***").

**IN CONSIDERATION OF** the recitals and mutual covenants and agreements set forth in this Agreement, the receipt and sufficiency of which is acknowledged and agreed to by Lake Bluff and North Chicago, the parties to this Agreement agree as follows:

## SECTION 1. RECITALS.

A. Lake Bluff and North Chicago are home rule units of local government by virtue of the provisions of the Illinois Constitution of 1970.

B. In 1986, Lake Bluff filed a *Quo Warranto* suit in Lake County Circuit Court (Case No. 86 MR 92) against North Chicago regarding the annexation and jurisdiction of various tracts of land lying along the respective borders of Lake Bluff and North Chicago ("***Boundary Litigation***").

C. In order to settle and resolve the Boundary Litigation, Lake Bluff and North Chicago entered into an Agreement dated January 19, 1988 ("***1988 Boundary Agreement***"). The 1988 Boundary Agreement was approved by the Court in the Boundary Litigation and incorporated into the Court's Consent Decree entered on February 16, 1988 ("***Consent Decree***"). The Consent Decree ordered each party to comply with the terms of the Decree and the Agreement. The Consent Decree and the Agreement were recorded in the Lake County Recorder's Office as Document No. 3051395.

D. The 1988 Boundary Agreement, among other things, establishes a boundary line between Lake Bluff and North Chicago beyond which neither party is allowed to annex territory without the consent of the other party. The 1988 Boundary Agreement has a term of 20 years and was initially set to expire on January 19, 2008. Pursuant to the First Amendment to the Boundary Agreement, the term will expire on April 2, 2008.

E. With regard to the area along their common boundaries ("***Lake Bluff-North Chicago Corridor***"), upon the expiration of the 1988 Boundary Agreement, Lake Bluff and North Chicago desire to establish and maintain a new agreement with new understandings with regard to the annexation, municipal jurisdiction, and development of certain specific properties within the Lake Bluff – North Chicago Corridor. Lake Bluff and North Chicago further desire to provide for responsible and compatible land use planning and administration within the Lake Bluff – North Chicago Corridor.

F. Lake Bluff and North Chicago desire to resolve outstanding matters and provide comprehensive solutions to issues concerning annexation, zoning, and land use management standards for the Lake Bluff - North Chicago Corridor.

G. Lake Bluff and North Chicago desire to limit and mitigate the potential adverse impacts of the development or redevelopment of certain parcels along the Lake Bluff - North Chicago Corridor on residential neighborhoods, local roads, traffic, and schools.

H. Lake Bluff and North Chicago desire to establish a foundation for ongoing communication, cooperation, and consultation on matters of mutual interest.

I. In furtherance of these objectives, Lake Bluff and North Chicago have reviewed, considered, and agreed to adopt jointly a Local Land Resource Management Plan containing certain annexation, land resource management, and zoning standards to be enforced within the Lake Bluff - North Chicago Corridor that form a necessary basis for the proper use, development, and redevelopment of the Lake Bluff - North Chicago Corridor and the public facilities that will be affected and impacted by that use, development, and redevelopment.

J. Lake Bluff and North Chicago intend that this Agreement, including the Exhibits to this Agreement, and any ordinances and resolutions adopted, and agreements executed, pursuant to this Agreement, will constitute a Local Land Resource Management Plan containing, and providing for the enforcement of, annexation and land resource management and zoning standards applicable to the Lake Bluff - North Chicago Corridor.

K. Lake Bluff and North Chicago have the power and authority to enter into this Agreement pursuant to their respective home rule powers; the provisions of Article VII, Section 10 of the Illinois Constitution of 1970; the Local Land Resource Management Planning Act, 50 ILCS 805/1 *et seq.*; the Illinois Intergovernmental Cooperation Act, 5 ILCS 220/1 *et seq.*; and 65 ILCS 5/11-12-9.

L. After full consideration of all annexation, planning, and intergovernmental issues affecting this matter, Lake Bluff has determined that it is in the best interests of the public welfare of Lake Bluff in general and the property owners and residents in and around the Lake Bluff - North Chicago Corridor in particular to enter into this Agreement.

M. After full consideration of all annexation, planning, and intergovernmental issues affecting this matter, North Chicago has determined that it is in the best interests of the pubic welfare of North Chicago in general and the property owners and residents in and around the Lake Bluff - North Chicago Corridor in particular to enter into this Agreement.

**SECTION 2. DEFINITIONS.**

Whenever used in this Agreement, the following terms will have the following meanings unless a different meaning is required by the context:

***"40-Acre Parcel"***: The unincorporated developed real estate consisting of approximately 40 acres, located immediately west of U.S. Route 41 and immediately north of the Sanctuary Parcel, as depicted on ***Exhibit A***.

***"Arden Shore Parcels"***: The unincorporated developed real estate generally known as the ***"Arden Shore North"*** and ***"Arden Shore South"*** residential developments, as described more specifically as follows:

***"Arden Shore North"***: The residential area generally located east of Green Bay Road, west of the Union Pacific commuter line, south of the existing North Chicago boundary line, and north of the EJ&E railroad tracks, consisting of approximately 30.9 acres and 47 single family residences and 53 vacant lots, as depicted on Exhibit A.

"***Arden Shore South***": The residential area generally located east of Green Bay Road, west of the Campbell Woods Subdivision, north of the Tangley Oaks Subdivision, and south of the EJ&E railroad tracks, consisting of approximately 35.3 acres and 61 single family residences and 53 vacant lots, as depicted on Exhibit A.

"***Effective Date***": March 11, 2008.

"***Gross Receipts***": The term "Gross Receipts" will have the same meaning as ascribed to that term in the Retailers' Occupation Tax Act.

"***Home Rule Sales Tax***": The sales tax imposed at any time in North Chicago pursuant to the Home Rule Municipal Retailers' Occupation Tax Act, 65 ILCS 5/8-11-1 or any similar or equivalent authority.

"***Lake Bluff - North Chicago Corridor***": The geographic areas depicted on Exhibit A.

"***Lake Bluff - North Chicago Corridor Parcels***": The following Parcels, as defined in this Agreement and depicted on Exhibit A: the 40-Acre Parcel, the Swing Parcel, the Medical School Parcel, the Arden Shore Parcels, the Southern Parcels (including the Sanitarium Property), and the Sanctuary Parcel.

"***Lake Bluff Zoning Ordinance***": The Village of Lake Bluff Zoning Ordinance, as the same has been and may, from time to time after the Effective Date, be amended.

"***Medical School Parcel***": The real estate consisting of approximately 11 acres, incorporated within North Chicago, located east of Green Bay Road, directly north of the Arden Shore Properties, and, as of the Effective Date, owned by the Chicago Medical School, as depicted on Exhibit A.

"***Municipal Sales Tax***": That portion or component of the Sales Tax generated by any use located on any portion of the 40-Acre Parcel annexed into North Chicago that North Chicago actually receives from the State of Illinois pursuant to the Home Rule Sales Tax, the Retailers' Occupation Tax Act, the Service Occupation Tax Act, the Service Use Tax Act, or the Use Tax Act.

"***Municipal Services***": Services provided by municipalities for the benefit of real estate and the occupants of the real estate that are in the nature of public utilities, including, without limitation, services such as water supply, storm sewer, sanitary sewer, cable television, refuse collection, and police, fire and emergency medical and paramedic services.

"***North Chicago Zoning Ordinance***": The North Chicago Zoning Ordinance, as the same has been and may, from time to time after the Effective Date, be amended.

"***Retailer's Occupation Tax Act***": The Illinois Retailers' Occupation Tax Act, 35 ILCS 120/1 *et seq.*, as the same has been, and may, from time to time after the Effective Date, be amended.

"***Sales Taxes***": Any and all taxes imposed and collected by the State of Illinois pursuant to the Home Rule Sales Tax, the Retailer's Occupation Tax Act, the Service Occupation Tax Act, the Service Use Tax Act, or the Use Tax Act.

"***Sales Tax Share Amount***": The payment to Lake Bluff of 50 percent of the Municipal Sales Tax that North Chicago is required to make pursuant to Paragraph 3.A.3 of this Agreement.

"***Sanctuary Parcel***": The developed real estate in Lake Bluff known as the Sanctuary residential development, consisting of approximately 90 acres, located immediately west of U.S. Route 41 and immediately south of the 40-Acre Parcel, as depicted on Exhibit A.

"***Service Occupation Tax Act***": The Illinois Service Occupation Tax Act, 35 ILCS 115/1 *et seq.*, as the same has been and may, from time to time after the Effective Date, be amended.

"***Service Use Tax Act***": The Illinois Service Use Tax Act, 35 ILCS 110/*1 et seq.*, as the same has been and may, from time to time after the Effective Date, be amended.

"***Southern Parcels***": The unincorporated developed real estate consisting of approximately 30,000 acres, including, without limitation, (i) the area known as the Knollwood residential area, and (ii) the approximately 30-acre area that currently serves as the location of the Hill Top Sanitarium ("***Sanitarium Property***"), all generally located west of U.S. Route 41, south of the Sanctuary Property, north of Illinois Route 176, and east of the Village of Green Oaks boundary line, and as depicted on Exhibit A.

"***Swing Parcel***": The incorporated undeveloped real estate in North Chicago consisting of approximately 40 acres, located immediately west of the 40-Acre Parcel, as depicted on Exhibit A.

"***Use Tax Act***": The Illinois Use Tax Act, 35 ILCS 105/1 *et seq.*, as the same has been and may, from time to time after the Effective Date, be amended.

**SECTION 3. TERRITORY IN THE LAKE BLUFF – NORTH CHICAGO CORRIDOR.**

**A. 40-Acre Parcel.**

1. Annexation. Lake Bluff will not object to the voluntary or involuntary annexation by North Chicago of all or any portion of the 40-Acre Parcel. Lake Bluff will neither voluntarily nor involuntarily annex all or any portion of the 40-Acre Parcel, nor will Lake Bluff provide or offer to provide Municipal Services to all or any portion of the 40-Acre Parcel.

2. Development Upon Annexation by North Chicago. The parties acknowledge that their mutual goal is to promote a retail, sales tax generating use on the 40-Acre Parcel but only if that use is compatible with the location and character of the residential neighborhood on the Sanctuary Parcel directly south of the 40-Acre Parcel. Accordingly, upon annexation, North Chicago will not permit any new use, development, redevelopment, expansion, or subdivision of all or any portion of the 40-Acre Parcel that is inconsistent with the following:

a. Permitted Uses: The uses existing as of the Effective Date of this Agreement and the uses listed on, and as provided pursuant to, Exhibit B to this Agreement.

b. Prohibited Uses: Residential, industrial, and any use not authorized under Subparagraph a of this Paragraph will be prohibited on the 40-Acre Parcel, unless approved in advance by Lake Bluff by resolution duly adopted by the Lake Bluff Village

Board. The western portion of the 40-Acre parcel (as depicted on Exhibit A) will be preserved and maintained as open space wetlands pursuant to applicable state and federal law.

c. Accessory Uses: Any use that is subordinate and accessory to, and is in common ownership or control with, a principal permitted use allowed under Subparagraph 3.A.2.a of this Agreement; provided, however, that the accessory uses will not utilize more than 10 percent of the gross floor area occupied by the principal permitted uses. No expansion, replacement, relocation, or additions will be permitted with regard to the cell tower existing on the 40-Acre Parcel as of the Effective Date. No new cell towers or other similar structures will be permitted on the 40-Acre Parcel.

d. Bulk Regulations:

(1) Maximum height (including all roof appurtenances, which appurtenances will be fully screened): three stories or 35 feet, whichever is less, unless otherwise approved in advance by Lake Bluff by resolution duly adopted by the Lake Bluff Village Board.

(2) Sanctuary Setback: no off-street parking or buildings will be located within 50 feet of the northern property line of the Sanctuary Parcel.

(3) Landscape Buffer: a 25-foot landscape buffer will be established and maintained along the southern and western property lines of the 40-Acre Parcel. No ingress or egress for the 40-Acre Parcel will be established or maintained within the 25-foot landscape buffer running along the southern property line of the 40-Acre Parcel.

e. Performance Standards. Any development or use of the 40-Acre Parcel will comply with the then-current edition of the International Code Council Property Maintenance Code and Fire Code. Light design and installation will emphasize low-level uniform lighting to avoid abrupt changes from bright lights to darkness. In order to protect nearby residential properties from the greater and/or more intensive lighting because of the development of the 40-Acre Parcel, nuisance glare and spillover lighting will be prohibited. Permanent outdoor sales displays, trash collection containers and trash compaction will be screened from adjacent residential view with opaque materials. Outdoor storage will be screened from view with opaque materials and be immediately adjacent to the buildings on the 40-Acre Parcel.

3. Sales Tax Sharing. North Chicago will pay to Lake Bluff an amount equal to 50 percent of all of the Municipal Sales Tax attributable to any portion of the 40-Acre Parcel that is annexed to North Chicago. Within 30 days after the end of each four-month period following the annexation by North Chicago of any portion of the 40-Acre Parcel ("**Quarter**"), North Chicago will pay to Lake Bluff the Sales Tax Share Amount applicable to that particular Quarter pursuant to this Paragraph. If, for any reason, the State of Illinois fails to distribute the Municipal Sales Tax revenue to North Chicago within 30 days after the end of any Quarter, North Chicago will provide notice of that failure to Lake Bluff. In that event, North Chicago will make the required Sales Tax Share Amount payment within 30 days after the date on which North Chicago actually receives the Municipal Sales Tax revenue due North Chicago for the applicable Quarter. Along with each payment required under this Paragraph, North Chicago will provide Lake Bluff with a reasonably detailed written accounting evidencing the amount of Municipal Sales Taxes attributable to the 40-Acre Parcel. North Chicago will require documents and other information from the owners and developers of the 40-Acre Parcel that may be

reasonably necessary to calculate the Municipal Sales Tax generated by the 40-Acre Parcel and the Sales Tax Share Amount due Lake Bluff under this Paragraph.

4. Lake Bluff Enforcement Rights. In any development or other agreement entered into by North Chicago with, or in any zoning or other approvals granted by North Chicago to, any person, owner, or entity that develops or uses any portion of the 40-Acre Parcel following annexation to North Chicago ("***Development Approval***"), North Chicago will provide in the Development Approval a right of Lake Bluff as a third-party beneficiary or otherwise to enforce the terms and conditions set forth in this Subsection 3.A of this Agreement.

5. Development in Other Circumstances. In the event that an owner or other party with an interest in all or any portion of the 40-Acre Parcel seeks to use, develop, redevelop, or expand all or any portion of the 40-Acre Parcel in unincorporated Lake County or in a municipality other than North Chicago in a manner inconsistent with the terms and conditions set forth in this Subsection 3.A of this Agreement, both Lake Bluff and North Chicago will take all necessary actions to register objections to the use, development, redevelopment, or expansion with the governmental agencies and officials with jurisdiction, and will cooperate with each other in pursuing those objections. Neither Lake Bluff nor North Chicago will, directly or indirectly, take any action, including specifically, but without limitation, the provision of Municipal Services to all or any portion of the 40-Acre Parcel, to support or allow any use, development, redevelopment, or expansion of the 40-Acre Parcel that is in any manner inconsistent with the terms and conditions set forth in this Subsection 3.A.

**B. Southern Parcels.** North Chicago will not object to the voluntary or involuntary annexation by Lake Bluff of all or any portion of the Southern Parcels. North Chicago will neither voluntarily nor involuntarily annex all or any portion of the Southern Parcels, nor will North Chicago provide, or offer to provide, Municipal Services to all or any portion of the Southern Parcels. North Chicago will not be responsible for any repairs to Atkinson Road in conjunction with the development of the Sanitarium Property.

**C. Arden Shore Parcels.** North Chicago will not object to the voluntary or involuntary annexation by Lake Bluff of all or any portion of the Arden Shore Parcels. North Chicago will neither voluntarily nor involuntarily annex all or any portion of the Arden Shore Parcels, nor will North Chicago provide, or offer to provide, Municipal Services to all or any portion of the Arden Shore Parcels except as provided in Paragraph 4.B.1 and Subsection 4.C of this Agreement.

**D. Swing Parcel.**

1. Development by North Chicago. North Chicago will not permit any use, development, or redevelopment of all or any portion of the Swing Parcel to a condition other than for the maintenance of the Swing Parcel as undeveloped open space in substantially the same condition as exists on the Effective Date of this Agreement.

2. Development in Other Circumstances. In the event that an owner or other party with interest in all or any portion of the Swing Parcel seeks to use, develop, redevelop, or expand all or any portion of the Parcel in unincorporated Lake County or in a municipality other than Lake Bluff in a manner inconsistent with the terms and conditions set forth in Paragraph 3.D.1 of this Agreement, Lake Bluff and North Chicago will take all necessary actions to register objections to the use, development, redevelopment, or expansion with the governmental agencies and officials with jurisdiction, and will cooperate with each other in

pursuing those objections. Neither Lake Bluff nor North Chicago will, directly or indirectly, take any action, including specifically, but without limitation, the provision of Municipal Services to all or any portion of the Swing Parcel, to support or allow any use, development, redevelopment, or expansion of the Swing Parcel that is in any manner inconsistent with the terms and conditions set forth in Paragraph 3.D.1 of this Agreement.

**E. Medical School Parcel.**

**1. General R-1 Restriction.** Except only as provided in Paragraph 2 of this Subsection, North Chicago will not authorize or allow any residential use of the Medical School Parcel that does not comply with the regulations applicable to the R-1 Single Family Residential District pursuant to the North Chicago Zoning Ordinance in effect as of the Effective Date ("***Existing R-1 Regulations***"). Any rezoning of the Medical School Parcel from its zoning classification as of the Effective Date, and any variations, exceptions, special uses, or other zoning or subdivision relief proposed with regard to the residential use of the Medical School Parcel, will require no less than 90 days' advance written notice to and approval by Lake Bluff by resolution duly adopted by the Lake Bluff Board of Trustees.

**2. Limited Chicago Medical School Student Housing Exception.** Notwithstanding the restrictions in Paragraph 1 of this Subsection, North Chicago may allow the Chicago Medical School to use the Medical School Property for its student housing ("***Student Housing Use***"), provided that the Student Housing Use will not produce an increase in student enrollment at Lake Bluff Elementary School District 65 or Community High School District 115 in excess of the increase in student enrollment to those Districts that would result from a residential development of the Medical School Property under the Existing R-1 Regulations.

**SECTION 4. SERVICING OF LAKE BLUFF - NORTH CHICAGO CORRIDOR.**

**A. Traffic Light for 40-Acre Parcel; Route 41 Access Points.** North Chicago and Lake Bluff will work independently, cooperatively, and together to support (i) the approval by the Illinois Department of Transportation, and by any other agencies with jurisdiction, and installation of a traffic signal at a single ingress and egress point for the 40-Acre Parcel aligned with the ingress and egress point for the property immediately east of the 40-Acre Parcel on the east side of U.S. Route 41 and (ii) the elimination of all other curb cuts on the 40-Acre Parcel along U.S. Route 41. North Chicago and Lake Bluff will further work independently, cooperatively, and together to oppose, and to not participate in, any effort to install any additional traffic signals along U.S. Route 41 between Illinois Route 137 on the north and the EJ&E railroad overpass on the south.

**B. Public Water Service.**

1. Arden Shore Parcels. North Chicago and Lake Bluff will work independently, cooperatively, and together to study the most effective and cost efficient manner of providing public potable water service to the Arden Shore Parcels, including a looped system of water mains in the area along Green Bay Road and the adjacent unincorporated parcels, including the Arden Shore Parcels. In the event that North Chicago serves any portion of the Arden Shore Parcels with potable water service, the rate charged will be no more than the rate that Lake Bluff charges to its residents for Lake Bluff potable water.

2. Emergency Cross Connection. North Chicago and Lake Bluff will commence negotiations and efforts to establish a cross connection agreement for the exchange of water supply and use in the event of an emergency.

C. **Arden Shore Parcels Sanitary Sewer and other Municipal Services.** North Chicago will support, and will not object or interfere with, any effort by Lake Bluff to provide sanitary sewer service to the Arden Shore Properties. North Chicago will not provide any Municipal Services to the Arden Shore Properties, including sanitary sewer service but excluding potable water service, except upon the approval of Lake Bluff by resolution duly adopted by the Lake Bluff Board of Trustees.

## SECTION 5. SPIRIT OF COOPERATION.

A. **Continued Cooperation.** The parties agree to continue to cooperate and work together to promote and achieve the goals of this Agreement. The parties agree to work cooperatively and collectively to take such actions as are necessary to ensure that the Lake Bluff - North Chicago Corridor is used and developed in a manner that is consistent with the terms and provisions of this Agreement.

B. **Approvals.** Approvals and consents required under this Agreement will not be unreasonably withheld by the party authorized to make the approval.

C. **Annual Meeting**. The Lake Bluff Village President and Village Administrator, or their designees, and the North Chicago City Mayor and Chief of Staff, or their designees, will meet together annually during the month of each annual anniversary of the Effective Date of this Agreement for the purpose of, but not necessarily limited to, discussing the use and development of the Lake Bluff - North Chicago Corridor and the progress of achieving the goals and purposes of this Agreement.

## SECTION 6. NOTIFICATION OF ANNEXATION OR REZONING PROPOSALS.

Lake Bluff and North Chicago will notify each other of, and prior to, any annexation, zoning, or subdivision action taken by either party with respect to any of the Lake Bluff - North Chicago Corridor Parcels. The notice required under this Section will be no less than 90 days immediately before the annexation, zoning, or subdivision requiring notice.

## SECTION 7. AMENDMENTS TO OFFICIAL DOCUMENTS.

If necessary, Lake Bluff will amend the Lake Bluff Zoning Code, North Chicago will amend the North Chicago Zoning Ordinance, and both parties will amend their official zoning maps and comprehensive plans to the maximum extent possible and necessary to reflect the understandings and agreements reached by the parties in this Agreement.

## SECTION 8. LITIGATION AND DEFENSE OF AGREEMENT.

A. **No Challenge to Agreement.** Neither Lake Bluff nor North Chicago will initiate or join or otherwise participate in any manner in any litigation or other proceeding that in any way challenges the validity of this Agreement, or any ordinances and resolutions adopted and agreements executed pursuant to this Agreement, including every portion thereof and every approval given, and every action taken, pursuant thereto.

B. **Defense of Agreement**. If, during the term of this Agreement, any lawsuits or proceedings are filed or initiated against either party before any court, commission, board, bureau, agency, unit of government or sub-unit thereof, arbitrator, or other instrumentality, that may materially affect or inhibit the ability of either party to perform its obligations under, or otherwise to comply with, this Agreement ("***Litigation***"), the party against which the Litigation is filed or initiated will promptly deliver a copy of the complaint or charge related to the Litigation to the other party and will thereafter keep the other party fully informed concerning all aspects of the Litigation. The other party may join in the Litigation in the manner and to the extent provided by law. Lake Bluff and North Chicago specifically agree to use their collective and respective best efforts to defend against all Litigation and to otherwise defend the validity of this Agreement, and all ordinances and resolutions adopted and agreements executed pursuant to this Agreement, including every portion thereof and every approval given, and every action taken, pursuant thereto. For each party, these best efforts will include at least retaining competent legal counsel; providing testimony when so requested; and hiring or sharing in the cost of expert witnesses. North Chicago will have the right to select legal counsel for Litigation concerning any parcel developed in, or annexed or contemplated in this Agreement to be annexed to, North Chicago. Lake Bluff will have the right to select legal counsel for Litigation concerning any parcel developed in, or annexed or contemplated in this Agreement to be annexed to, Lake Bluff. Both parties will have the right to retain, at its own expense, its own independent legal counsel for any matter.

## SECTION 9. REMEDIES.

A. **Remedies**. In the event of a breach or an alleged breach of this Agreement by either party, either party may, by suit, action, mandamus or any other proceeding, in law or in equity, including specific performance, enforce or compel the performance of this Agreement.

B. **Notice and Cure**. Neither party may exercise the right to bring any suit, action, mandamus or any other proceeding pursuant to Subsection A of this Section without first providing written notice to the other party of the breach or alleged breach and allowing a period of 15 days for the curing of said breach or alleged breach; provided, however, that in the event such violation or failure cannot be cured within said 15 day period notwithstanding diligent and continuous effort by the party receiving notice and said party will have promptly commenced to cure the violation or failure and will have thereafter prosecuted the curing of same with diligence and continuity, then the period for curing such violation or failure will be extended for such period as may be necessary for curing such violation with diligence and continuity.

## SECTION 10. TERM.

This Agreement will be in full force and effect from and after the date of its execution for a period of 20 years; provided, however, that if such 20 year term will be held invalid, the term will be the maximum term permitted by applicable law as of the Effective Date of this Agreement or such longer term as may be subsequently allowed. Unless the parties otherwise agree in writing, if and to the extent permitted by applicable law at any time during the term of this Agreement, and after public hearing if required by state law, the term of this Agreement will be extended to the full extent from time to time permitted by law without further action by the parties.

**SECTION 11. GENERAL PROVISIONS.**

**A. Complete Agreement; Supersedence; Termination of 1988 Boundary Agreement.** This Agreement and the Exhibits attached to this Agreement constitute the complete agreement of the parties regarding the Lake Bluff - North Chicago Corridor and will, as of the Effective Date, supersede and nullify all prior drafts and agreements concerning the Lake Bluff - North Chicago Corridor or any portion thereof, including the 1988 Boundary Agreement and the First Amendment to that Agreement. As of the Effective Date, the 1988 Boundary Agreement shall be deemed to have been terminated by the parties.

**B. Exhibits; Conflicts.** Exhibits A and B attached to this Agreement are incorporated into this Agreement and made a part of this Agreement by this Subsection. In case of any conflict among the provisions of this Agreement or of the Exhibits, the provision that best promotes the intent of the parties will control.

**C. Amendments.** No amendment to or modification of this Agreement will be effective unless and until it is in writing and is approved by the Lake Bluff Corporate Authorities and the North Chicago Corporate Authorities, by resolutions duly adopted, and executed and delivered by the authorized representatives of Lake Bluff and North Chicago.

**D. Notices.** Any notice or other communication required or permitted to be given under this Agreement will be in writing, and will be deemed delivered to and received by the addressee thereof when delivered in person at the address set forth below, or three business days after deposit thereof in any main or branch United States Post Office, certified or registered mail, return receipt requested, postage prepaid, properly addressed to the parties, respectively, as follows:

For notices and communications to Lake Bluff:

Village of Lake Bluff
40 East Center
Lake Bluff, Illinois 60044
Attention: Village Administrator

With a copy to:

Village Attorney
Peter Friedman
Holland & Knight LLP
131 South Dearborn Street, 30th Floor
Chicago, Illinois 60603

For notices and communications to North Chicago:

City of North Chicago
1850 Lewis Avenue
North Chicago, Illinois 60064
Attention: Mayor

With a copy to:

City Attorney
Charles Smith
Smith & Laluzerne Ltd
209 West Madison St., 2nd Floor
Waukegan, IL 60085-4345

By notice complying with the foregoing requirements of this paragraph, each party will have the right to change the address or addressee or both for all future notices and communications to such party, but no notice of change of address will be effective until actually received.

E. **Governing Law**. This Agreement and the rights of the parties under this Agreement will be governed by, and construed, interpreted, and enforced in accordance with, the internal laws, and not the conflict of law rules of the State of Illinois.

F. **Interpretation**. This Agreement has been negotiated by all parties and will not be interpreted or construed against the party drafting the Agreement.

G. **Change in Laws**. Unless otherwise explicitly provided in this Agreement, any reference to laws, ordinances, rules, or regulations of any kind will include such laws, ordinances, rules, or regulations of any kind as they may be amended or modified from time to time after the Effective Date.

H. **Headings**. The headings of the sections, paragraphs, and other parts of this Agreement are for convenience and reference only and in no way define, extend, limit, or describe the meaning, scope, or intent of this Agreement, or the meaning, scope, or intent of any provision of this Agreement.

I. **Time of Essence**. Time is of the essence in the performance of all terms and provisions of this Agreement.

J. **Nonseverability**. It is the express intent of the parties hereto that should any provision, covenant, agreement, or portion of this Agreement or its application to any person, entity, or property be held void, invalid, or unenforceable by a court of competent jurisdiction, then this entire Agreement will thereupon be held invalid and of no force or effect, it being the intent of the parties that all of the provisions of this Agreement be treated as an individual whole.

K. **No Third Party Beneficiaries**. Nothing in this Agreement will create, or be construed to create, any third party beneficiary rights in any person or entity not a signatory to this Agreement.

L. **Counterparts**. This Agreement may be executed in any number of multiple identical counterparts and all of said counterparts will, individually and taken together constitute the Agreement.

M. **Recordation**. This Agreement will be recorded in the office of the Recorder of Deeds of Lake County, as required by state statutes.

**IN WITNESS WHEREOF**, the parties have caused this Agreement to be executed by their duly authorized representatives as of the date first above written.

**VILLAGE OF LAKE BLUFF**

By: _____
Village President

ATTEST:
_____
Village Clerk

**CITY OF NORTH CHICAGO**

By: _____
Mayor

ATTEST:
_____
City Clerk

ACKNOWLEDGEMENT

STATE OF ILLINOIS )
) SS
COUNTY OF LAKE )

This instrument was acknowledged before me on March 12, 2008 by Christine Letchinger, the Village President of the **VILLAGE OF LAKE BLUFF**, an Illinois municipal corporation, and by Michael Klawitter, the Village Clerk of the Village of Lake Bluff.

"OFFICIAL SEAL"
Gerald P. Nellessen
Notary Public, State of Illinois
My Commission Expires Jan. 7, 2009

SEAL:

Signature of Notary

My Commission expires: 01/07/09

ACKNOWLEDGEMENT

STATE OF ILLINOIS )
) SS
COUNTY OF LAKE )

This instrument was acknowledged before me on March 3, 2008 by Leon Rockingham, Jr., the Mayor of the **CITY OF NORTH CHICAGO**, an Illinois municipal corporation, and by Lori Collins, the City Clerk of the City of North Chicago.

OFFICIAL SEAL
JESSICA L BONANNO
NOTARY PUBLIC - STATE OF ILLINOIS
MY COMMISSION EXPIRES:10/06/08

SEAL:

Signature of Notary

My Commission expires: 10/06/08

# EXHIBIT A

## MAP OF LAKE BLUFF – NORTH CHICAGO CORRIDOR PARCELS

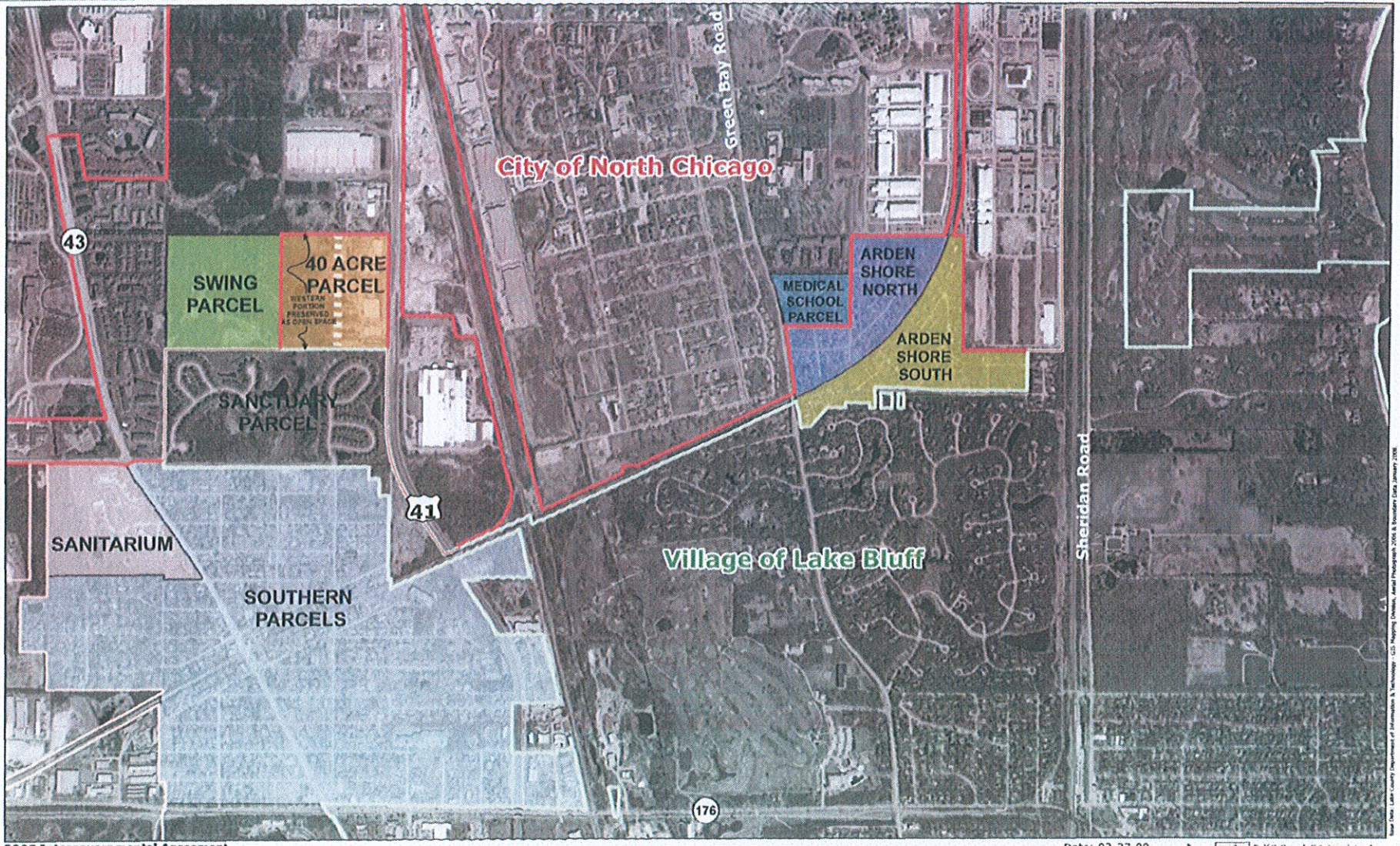


**2008 Intergovernmental Agreement**
**City of North Chicago/Village of Lake Bluff**
**Exhibit A**

City of North Chicago Boundary
Village of Lake Bluff Boundary
Village of Green Oaks Boundary
Corridor Agreement Areas

Date: 02-27-08
Original Scale: 1":1000'

500 0 500 1,000 Feet

Rolf C. Campbell & Associates, Inc.
Planning Consultants
111 Waukegan Road - Suite 1000
Lake Bluff, Illinois 60044
(847) 735-5500 Fax: (847) 735-1010

Base Data: Lake County Department of Information & Technology - GIS Mapping Division, Aerial Photograph 2006 & Boundary Data January 2008.

# EXHIBIT B

## PERMITTED USES – 40-ACRE PARCEL

The uses listed below, and no others, are permitted on the 40-Arcre Parcel; provided, however, that no use of the Parcel will be allowed for (a) Motor Vehicle Dealers (New and Used), (b) Auto and Home Supply Stores, (c) Boat Dealers, (d) Recreational Vehicle Dealers, or (e) Automotive Dealers, Not Elsewhere Classified, except upon the approval of Lake Bluff by resolution duly adopted by the Lake Bluff Board of Trustees. In interpreting the use designations, and corresponding "SIC" numbers, reference should be made to the Standard Industrial Classification Manual (1987), published by the Office of Management and Budget, Executive Office of the President of the United States, available from the Superintendent of Documents, U.S. Government Printing Office, Washington, D.C., as amended.

### A. Retail Trade

| | | |
|---|---|---|
| 1. | Paint, Glass and Wallpaper Stores | SIC 523 |
| 2. | Hardware Stores | SIC 525 |
| 3. | Retail Nurseries & Garden Stores Without Open Yards | SIC 526 |
| 4. | General Merchandise Stores | SIC 53 |
| 5. | Food Stores | SIC 54 |
| 6. | Auto and Home Supply Stores Without Service Bays | SIC 553 |
| 7. | Apparel and Accessory Stores | SIC 56 |
| 8. | Furniture and Home Furnishings Stores | SIC 57 |
| 9. | Drug Stores | SIC 591 |
| 10. | Used Merchandise Stores | SIC 593 |
| 11. | Sporting Goods and Bicycle Shops | SIC 5941 |
| 12. | Bookstores | SIC 5942 |
| 13. | Stationary Stores | SIC 5943 |
| 14. | Jewelry Stores | SIC 5944 |
| 15. | Hobby, Toy, and Game Shops | SIC 5945 |
| 16. | Camera and Photographic Supply Stores | SIC 5946 |
| 17. | Gift, Novelty, and Souvenir Shops | SIC 5947 |
| 18. | Luggage and Leather Goods Stores | SIC 5948 |
| 19. | Sewing, Needlework and Piece Goods | SIC 5949 |
| 20. | Florists | SIC 5992 |
| 21. | Optical Goods Stores | SIC 5995 |

### B. Services

| | | |
|---|---|---|
| 1. | Garment Pressing, and Cleaners' Agents | SIC 7212 |
| 2. | Photographic Studios, Portrait | SIC 7221 |
| 3. | Beauty Shops | SIC 7231 |
| 4. | Barber Shops | SIC 7241 |
| 5. | Shoe Repair Shops and Shoeshine Parlors | SIC 7251 |
| 6. | Tax Return Preparation Services | SIC 7291 |
| 7. | Advertising Services | SIC 731 |
| 8. | Credit Reporting and Collection | SIC 732 |
| 9. | Mailing, Reproduction, Stenographic Services | SIC 733 |
| 10. | Services to Buildings Services | SIC 734 |
| 11. | Personnel Supply Services | SIC 736 |

| | | |
|---|---|---|
| 12. | Miscellaneous Business Services | SIC 738 |
| 13. | Electrical Repair Shops | SIC 762 |
| 14. | Watch, Clock, Jewelry Repair Services | SIC 764 |
| 15. | Motion Picture Production & Services | SIC 781 |
| 16. | Motion Picture Distribution & Services | SIC 782 |
| 17. | Video Tape Rental | SIC 784 |
| 18. | Offices & Clinics of Medical Doctors | SIC 801 |
| 19. | Offices & Clinics of Dentists | SIC 802 |
| 20. | Offices of Osteopathic Physicians | SIC 803 |
| 21. | Offices of Other Health Practitioners | SIC 804 |
| 22. | Medical and Dental Laboratories | SIC 807 |
| 23. | Health & Allied Services | SIC 809 |
| 24. | Legal Services | SIC 811 |
| 25. | Data Processing Schools | SIC 8243 |
| 26. | Business and Secretarial Schools | SIC 8244 |
| 27. | Individual and Family Social Services | SIC 832 |
| 28. | Job Training and Related Services | SIC 833 |
| 29. | Museums and Art Galleries | SIC 841 |
| 30. | Engineering and Management Services | SIC 87 |
| 31. | Arrangement of Passenger Transportation | SIC 472 |

C. **Finance, Insurance, Office, And Real Estate**

| | | |
|---|---|---|
| 1. | Depository Institutions Without Drive In or Drive Through Facilities, or Drive-Up Auto Teller Machines | SIC 60 |
| 2. | Nondepository Institutions | SIC 61 |
| 3. | Security and Commodity Brokers | SIC 62 |
| 4. | Insurance Carriers | SIC 63 |
| 5. | Insurance Agents, Brokers, and Service | SIC 64 |
| 6. | Real Estate | SIC 65 |
| 7. | Holding and Other Investment Offices | SIC 67 |
| 8. | General Offices, not elsewhere classified | |

D. **Additional Miscellaneous Uses**

| | | |
|---|---|---|
| 1. | Motor Vehicle Dealers (New and Used) | SIC 5511 |
| 2. | Auto and Home Supply Stores | SIC 5531 |
| 3. | Boat Dealers and Sales | SIC 5551 |
| 4. | Recreational Vehicle Dealers | SIC 5561 |
| 5. | Automotive Dealers, Not Elsewhere Classified | SIC 5599 |
| 6. | Prepackaged Software | SIC 7372 |
| 7. | Computer Integrated Systems Design | SIC 7373 |
| 8. | Computer Rental and Leasing | SIC 7377 |
| 9. | Apparel And Accessory Stores | SIC 5699 |
| 10. | Men's And Boys' Clothing And Accessory Stores | SIC 5611 |
| 11. | Women's Clothing Stores | SIC 5621 |
| 12. | Women's Accessory And Specialty Stores | SIC 5632 |
| 13. | Children's And Infants' Wear Stores | SIC 5641 |
| 14. | Family Clothing Stores | SIC 5651 |
| 15. | Shoe Stores | SIC 5661 |
| 16. | Miscellaneous Apparel And Accessory Stores | SIC 5699 |

| | | |
|---|---|---|
| 17. | Furniture Stores | SIC 5712 |
| 18. | Floor Covering Stores | SIC 5713 |
| 19. | Drapery, Curtain, and Upholstery Stores | SIC 5714 |
| 20. | Miscellaneous Home Furnishings Stores | SIC 5719 |
| 21. | Household Appliance Stores | SIC 5722 |
| 22. | Radio, Television, Consumer Electronics, And Music Stores | SIC 5731 |
| 23. | Computer and Computer Software Stores | SIC 5734 |
| 24. | Record and Prerecorded Tape Stores | SIC 5735 |
| 25. | Musical Instrument Stores | SIC 5736 |
| 26. | Motion Picture Theaters, Except Drive-In | SIC 7832 |
| 27. | Office Equipment Sale | SIC 5044 |
| 28. | Health Club, Swimming Pool | SIC 7991 |
| 29. | Sign Shop | SIC 7389 |
| 30. | Artist's Shop | SIC 7336, 5999 |

Under no circumstances will the list of uses included on this Exhibit be deemed or construed to include any "adult entertainment establishment" (as defined in Lake Bluff Ordinance No. 2001-02), or any use involving live entertainment or the on-site consumption of alcohol.

AGENDA ITEM: IViii

# MEMORANDUM

**To:** President Letchinger & Village Board of Trustees
Village Department Heads

**From:** Gerald Nellessen, Building Codes Supervisor/Deputy Building Commissioner

**Date:** January 9, 2013

**Subject:** Building Regulations and Comprehensive Amendments to the Village's Building Regulations

In 2005 the Village Board made a commitment to review and consider updates to the Lake Bluff Building Codes every three years. Keeping with that commitment, the ABR received a presentation and held a discussion regarding certain Building Code updates on November 6, 2012. Pursuant to Village Building Code review practices, the ABR held a Public Hearing on January 2, 2013 regarding updates to the following International Code Council ("ICC"), State of Illinois and National Fire Protection Association ("NFPA") Standards:

| Current Code Regulations: | Proposed Updates to the Code Regulations: |
|---|---|
| 1997 Illinois Accessibility Code; | 1997 Illinois Accessibility Code; |
| 2009 ICC Energy Conservation Code and ANSI/ASHRAE/IESNA Standard 90.1-2007; | 2012 ICC Energy Conservation Code and ANSI/ASRAE/IESNA Standard 90.1-2010; |
| 2009 ICC International Existing Building Code; | 2012 ICC International Existing Building Code; |
| 2009 ICC International Fuel Gas Code; | 2012 ICC International Fuel Gas Code; |
| 2009 ICC International Mechanical Code; | 2012 ICC International Mechanical Code; |
| 2009 ICC International Property Maintenance Code; | 2012 ICC International Property Maintenance Code; |
| 2008 National Electrical Code (NFPA Standard 70); | 2011 National Electrical Code (NFPA Standard 70); |
| 2004 State of Illinois Plumbing Code; | 2004 State of Illinois Plumbing Code; |
| 2009 ICC International Building Code; | 2012 ICC International Building Code; |
| 2009 ICC International Residential Code; and | 2012 ICC International Residential Code; |
| 2009 International Fire Code | 2012 ICC International Fire Code; and |
| 2008 ICC 700 Green Building Standard for Residential | 2012 ICC International Green Construction Code. |
| | 2012 Swimming Pool and Spa Code |

Following the 1/2/2013 hearing, the ABR voted unanimously to recommend approval of these Building Code updates to the Village Board. Attached please find a copy of the proposed local code amendments. A copy of each of the printed codes is also on file at the Village Hall. Given the technical nature of Building Codes, Staff has historically presented the regulations to the Committee-of-the-Whole ("COW") meeting prior to formal consideration at a Village Board meeting.

On Monday night I plan on providing (i) an overview of the code adoption process, (ii) a summary of the recommended code updates, and (iii) a review of each of the regulations. I also plan on the review of each of the regulations to take more than one COW meeting (continue to the next COW meeting). As always, please feel free to contact me with any questions or comments at (847) 283-6885.

**VILLAGE OF LAKE BLUFF**

**ORDINANCE NO. 2012-___**

**AN ORDINANCE COMPREHENSIVELY AMENDING TITLE 9 OF THE LAKE BLUFF MUNICIPAL CODE AND ADOPTING VARIOUS STANDARD AND CODES PERTAINING TO BUILDING REGULATIONS**

**WHEREAS**, Title 9 of the Lake Bluff Municipal Code (the "*Municipal Code*") sets forth certain regulations and restrictions known as the "Lake Bluff Building Code" (the "*Building Regulations*") to ensure the public health, safety, and welfare as affected by building construction and to secure safety to life and property from all hazards incident to the occupancy of buildings, structures, or premises; and

**WHEREAS**, the Building Regulations currently adopt by reference, with various modifications, certain State of Illinois and other model codes, including: the 2009 International Building Code; the 2009 International Residential Code for One and Two Family Dwellings; the 2009 International Property Maintenance Code; the 2009 International Mechanical Code; the 2004 Illinois Plumbing Code; the 2008 National Electrical Code; the 2009 International Fire Code; the 2009 International Energy Conservation Code; ANSI/ASHRAE/IESNA Standard 90.1-2007; the 2008 ICC 700 National Green Building Standard for Residential Buildings, and the 2009 International Fuel Gas Code; and

**WHEREAS**, to ensure that the Village is using the best industry standards and practices, the Village desires to adopt by reference, with various modifications, the following model codes: the 2012 International Building Code; the 2012 International Residential Code for One and Two Family Dwellings; the 2012 International Property Maintenance Code; the 2012 International Mechanical Code; the 2004 Illinois Plumbing Code; the 2011 National Electrical Code; the 2012 International Fire Code; the 2012 International Energy Conservation Code; ANSI/ASHRAE/IESNA Standard 90.1-2010; the 2012 International Green Construction Code; and the 2012 International existing Building Code; and the 2012 International Swimming Pool and Spa Code; and the 2012 International Fuel Gas Code; and

**WHEREAS**, under Section 1-3-2 of the Illinois Municipal Code, 65 ILCS 5/1-3-2, local governments may adopt all or part of the provisions of public records and any published compilation of rules and regulations which have been prepared by nationally recognized associations, including building, electrical wiring, mechanical, fuel gas systems, energy conservation, and property maintenance codes; and

**WHEREAS**, at least one copy of the; the 2012 International Building Code; the 2012 International Residential Code for One and Two Family Dwellings; the 2012 International Property Maintenance Code; the 2012 International Mechanical Code; the 2004 Illinois Plumbing Code; the 2011 National Electrical Code; the 2012 International Fire Code; the 2012 International Energy Conservation Code; ANSI/ASHRAE/IESNA Standard 90.1-2010; the 2012 International Green Construction Code; and the 2012 International Existing Building Code; and the 2012 International Swimming Pool and Spa

Code; and the 2012 International Fuel Gas Code have been on file in the office of the Village Clerk for public use, inspection, and examination for at least 30 days preceding the adoption of this Ordinance, as required by 65 ILCS 5/1-3-2; and

**WHEREAS**, three copies of the 2004 Illinois State Plumbing Code have been on file in the office of the Village Clerk for public use, inspection, and examination for at least 30 days preceding the adoption of this Ordinance, as required by 65 ILCS 5/1-3-2; and

**WHEREAS**, at least 30 days before the adoption of this Ordinance, the Village provided identification of the codes being adopted herein, by title and edition, to the Illinois Capital Development Board Division of Building Codes and Regulations (formerly the Illinois Building Commission) as required by 65 ILCS 5/1-2-3.1; and

**WHEREAS**, after careful study, including review of recommendations from the Village staff, the President and Board of Trustees of the Village of Lake Bluff have determined that it is useful, appropriate, and in the best interests of the Village to amend Title 9 of the Village of Lake Bluff Municipal Code, pertaining to building regulations, in the manner provided in this Ordinance;

**NOW, THEREFORE, BE IT ORDAINED BY THE PRESIDENT AND BOARD OF TRUSTEES OF THE VILLAGE OF LAKE BLUFF, LAKE COUNTY AND STATE OF ILLINOIS, AS FOLLOWS:**

**Section 1. Recitals.**

The foregoing recitals are incorporated herein as findings of the President and Board of Trustees.

**Section 2. Comprehensive Amendment of Title 9.**

Title 9, titled “General Building Regulations; Penalties”, of the Lake Bluff Municipal Code is hereby amended in its entirety so that Title 9 will hereafter be and read as provided in Exhibit A attached to this Ordinance, which Exhibit A is by this reference incorporated into and made a part of this Ordinance. As set forth in Exhibit A, the Village adopts the following codes, in the manner set forth in, and as amended by, Exhibit A: the 2012 International Building Code; the 2012 International Residential Code for One and Two Family Dwellings; the 2012 International Property Maintenance Code; the 2012 International Mechanical Code; the 2004 Illinois Plumbing Code; the 2011 National Electrical Code; the 2012 International Fire Code; the 2012 International Energy Conservation Code; ANSI/ASHRAE/IESNA Standard 90.1-2010; the 2012 International Existing Building Code; the 2012 International Green Construction Code; and the 2012 International Swimming Pool and Spa Code; and the 2012 International Fuel Gas Code.

**Section 3. This Ordinance Controls.**

To the extent that the provisions of this Ordinance conflict with, or are inconsistent with, the provisions of any other Village code, ordinance, or regulation, the provisions of this Ordinance will apply and control.

**Section 4. Preservation of Pending Actions and Proceedings.**

Any and all pending actions or proceedings arising out of any code, ordinance, or regulation amended, repealed, or affected by this Ordinance are preserved and saved.

**Section 5. Effective Date.**

This Ordinance will be in full force and effect from and after its passage, approval, and publication in pamphlet form in the manner provided by law.

PASSED this _____ day of _____ 2013.

AYES:

NAYS:

ABSENT:

ABSTAIN:

FIRST READING:

SECOND READING:

APPROVED this _____ day of _____ 2010.

_____
Christine Letchinger, Village President

ATTEST:

_____
Michael Klawitter, Village Clerk

# EXHIBIT A

# TITLE 9
# BUILDING REGULATIONS

## TABLE OF CONTENTS


| | |
|---|---|
| CHAPTER 1 | ADMINISTRATION AND ENFORCEMENT |
| CHAPTER 2 | INTERNATIONAL BUILDING CODE |
| CHAPTER 3 | INTERNATIONAL RESIDENTIAL CODE FOR ONE AND TWO FAMILY DWELLINGS |
| CHAPTER 4 | INTERNATIONAL PROPERTY MAINTENANCE CODE |
| CHAPTER 5 | INTERNATIONAL FIRE CODE |
| CHAPTER 6 | ILLINOIS PLUMBING CODE |
| CHAPTER 7 | NATIONAL ELECTRICAL CODE |
| CHAPTER 8 | INTERNATIONAL FUEL GAS CODE |
| CHAPTER 9 | ILLINOIS ACCESSIBILITY LAW |
| CHAPTER 10 | INTERNATIONAL ENERGY CONSERVATION CODE |
| CHAPTER 11 | INTERNATIONAL MECHANICAL CODE |
| CHAPTER 12 | GREEN BUILDING GUIDELINES |
| CHAPTER 13 | INTERNATIONAL SWIMMING POOL AND SPA CODE |
| CHAPTER 14 | INTERNATIONAL EXISTING BUILDING CODE |
| CHAPTER 15 | ARCHITECTURAL DESIGN |

# CHAPTER 1
# ADMINISTRATION AND ENFORCEMENT

9-1-1 Title. This title 9 will be known as the Lake Bluff Building Regulations.

9-1-2 Scope. The regulations of this title 9 control all matters concerning the construction, alterations, addition, repair, replacement, removal, demolition, use, occupancy, and maintenance of all buildings and structures, and these regulations apply to existing or proposed buildings and structures.

9-1-3 Applicability.

A. General. These regulations cover all matters affecting or relating to buildings and structures, as set forth in Section 9-1-1 of this chapter.

B. Exemptions. These regulations will not be construed to require alterations to lawfully constructed existing buildings or equipment, unless specific provision is made to the contrary or unless the provision is expressly made retroactive.

C. Building Commissioner: The building commissioner of the village, as appointed pursuant to section 1-6I-1 of the municipal code, is the building official responsible for implementing and enforcing this Title. Any reference in this Title to the "building official", "director" or "code official" shall refer to and mean the building commissioner.

D. Matters not provided for. Any requirement essential for structural, fire, electrical, mechanical, or sanitary safety of an existing or proposed building or structure, or essential for the safety of the occupants thereof, and which is not specifically covered by this title or other codes and ordinances of the Village, will be determined by the building official based on the exercise of his or her best professional judgment in accordance with customary practice in the field.

E. Other regulations. When these regulations are more restrictive than other codes, ordinances, or regulations of the Village, this title will apply and control; but, in every case, the most rigid requirements of either this title or such other applicable codes, ordinances, and regulations as may be in force or legally adopted will apply and control whenever they may be in conflict.

9-1-4 Existing Structures.

A. Unlawful uses. Any use, building, or structure used or construed unlawfully or that was in violation of any previous codes or regulations, prior to the adoption of this title, will be deemed a continuing violation and subject to the penalties of this title.

B. Continuation of uses consistent with the Village Zoning Regulations. Consistent with the village's zoning regulations, set forth in title 10 of this Municipal Code, the legal use and occupancy of any building or structure existing on the date of adoption of this title or for which building permits have been applied and which meet all provisions of previous regulations may be continued without change, except as may be specifically covered in this title or as may be

deemed necessary by the building commissioner for the general safety and welfare of the occupants and the public.

C. Changes in use. It is unlawful to make any change in the use or occupancy of any building or structure or portion thereof which would subject it to any provision of this title without the approval of the building commissioner, who will determine that such building or structure meets the intent of the provisions of all codes and ordinances governing the new use or occupancy and that such change does not result in any greater hazard to public safety or welfare. When a change of use is contemplated in any part of an existing building or structure, that part of the building or structure must be upgraded to comply with this title.

D. Alterations or repairs. Alterations or repairs may be made to any building or structure without requiring the entire building or existing structure to comply with all the requirements of this title provided such alterations or repairs themselves conform to all applicable requirements for a new building or structure and provided further that such alterations or repairs must not cause an existing building or structure to become unsafe or unsanitary and must not adversely affect the performance of the building or structure. All areas of a building, new and existing, must comply with all fire and life safety provisions of this title.

9-1-5 Building Permits.

A. Permit Required. It is unlawful to construct, enlarge, repair, alter, or demolish a structure, or to change the occupancy of a building or structure in a manner requiring greater strength, an altered exit way, or sanitary provisions, or to change to another use, or to install or alter any equipment for which provision is made in or the installation of which is regulated by this title, without first filing an application with the building commissioner in writing and obtaining the required permits therefor; except that the permit requirement may be waived, in the sole discretion of the building commissioner, for work costing $200 or less.

B. Form Of Application. Every application for a permit must be submitted on a building permit application form supplied by the building department and must be accompanied by such fees as prescribed in section 1-12-3 of the municipal code.

C. By Whom Application Is Made. Every application for a permit must be made by the owner in fee or lessee of the building or structure, or the agent of either, or by the contractor or licensed engineer or architect employed by such owner or lessee in connection with the work to be done. If the application is made by a person other than the owner in fee, then the application must be accompanied by a duly verified affidavit of the owner, or the qualified person making the application, stating that the proposed work is authorized by the owner in fee and that the applicant is authorized to make such application. The full names and addresses of the owner, lessee, and applicant and of the responsible officers, if the owner or lessee is a corporate body, must be stated in the application. All applications shall have all project applicable contractors listed on the permit.

D. Description Of Work. Every application for a permit must contain a general description of the proposed work, its location, the use and occupancy of all parts of the building or structure and of all portions of the site or lot not covered by the building or structure, and such additional information as may be required by the building commissioner.

E. Plans And Specifications. Every application for a permit must be accompanied by at least six copies of specifications and plans drawn to scale, unless the building commissioner grants permission to submit fewer than six copies. The specifications and plans must be drawn with sufficient clarity, detail, and dimensions to show clearly the nature and character of the work to be performed. When, in the determination of the building commissioner, a specific level of quality of materials or systems is essential for conformity to this title, specific information must be given to establish such quality. The terms “this title”, “legal”, “its equivalent”, or any other such terms may not be used as a substitute for specific information. When the estimated cost of construction exceeds $10,000.00, or the proposed work involves the structural components of the building, the plans and specifications must bear the signature and seal of an architect or a structural engineer licensed to work in Illinois and, if appropriate, the signature and seal of a registered professional engineer. The building commissioner may waive the requirement for filing plans when the work involved is of a minor nature. When an application is made for an unusually complex or innovative design or magnitude of construction or when code reference standards in Chapter 35 of the 2012 International Building Code or Chapeter 44 of the 2012 International Residential Code, as adopted in chapter 2 and chapter 3 respectively of this title, must be extensively applied to determine code compliance, the building commissioner may require that the plan review be conducted by an approved plan review service/company or alternative reviewing agency at the applicant’s expense.

F. Plat Of Survey. Every application must include five copies of a certified plat of survey prepared, signed, and sealed by a qualified land surveyor licensed by the state of Illinois, showing all boundaries of the property, setback lines, existing structures if any, and all easements of record submitted with the application.

G. Estimate of Cost. Every application must include an estimate by the owner or his or her representative or agent of the total estimated cost of the work proposed. Such cost estimate must include, among other things, all costs of site preparation, mobilization, excavation, heating, plumbing, electrical wiring, carpentry, materials, fire protection, utilities, air conditioning, and the like. If the total cost at completion exceeds such cost estimate, then the permittee must file with the building commissioner a statement of such total cost at completion. The Building commissioner reserves the right to request documentation of completed project cost

H. Site Plan.

1. Every application for a permit authorizing new construction must include a fully dimensioned site plan, drawn to scale in accordance with a plat of survey, showing the size and location of all new construction and all existing buildings and structures on the site, distances of the buildings or structures to all property lines, and the existing grades at the corners of the site and at as many other locations as necessary to show the topography of the site. The site plan also must show the proposed final grades of the top of the building foundation walls, the finished site grades at all corners, the intended surface water drainage plan, all parking lots with the required vehicle parking stalls, all outside lighting, landscaping, utility lines, and other required elements.

2. For demolition projects, the site plan must show all buildings and structures to be demolished, the location and size of all existing buildings and structures that are to remain on the site, and all finished grades, storm water drainage structures,

and swales to drain the site on completion of the demolition work. There shall also be a tree survey submitted indicating the existing trees on the property and the trees that will be removed or impacted by the demolition project. A property restoration plan shall also be included with the submittal.

3. In all cases, the requirement of a fully developed site plan may be modified or waived by the Building Commissioner in lieu of a simple plat plan for small building additions, accessory buildings and structures, demolition of minor buildings or structures, or other minor projects. There shall be no dumpsters located on any public way, including but not limited to streets and rights of way.

I. Spot-In Survey. In all cases, a spot in survey ("spotted survey") is required after foundation walls have been poured and stripped or any slab but before any work on the superstructure is begun.

9-1-6 Permit Application Review and Approval.

A. Action on Application. The building commissioner will examine or cause to be examined each application for a permit, and any amendments thereto, within a reasonable time after filing. If the application, plans, or other required documents do not conform to the requirements of all pertinent laws and ordinances, then the building commissioner will notify the applicant of the deficiencies of the application and generally of any additional information or data necessary to establish that the application will meet the applicable requirements. When the building commissioner is satisfied that the proposed work as represented by the permit application, plans, and documents conforms to the requirements of this title and all laws and ordinances applicable thereto, the building commissioner will issue a permit as soon as practicable.

B. Signature Validation. No permit is valid unless it is signed by the building commissioner or his or her designee. The building commissioner's signature must be executed on or attached to every permit, or the building commissioner may designate one or more inspectors or other employees to validate a permit by affixing their signatures thereto.

C. Approved Plans. The building commissioner or his or her designee must stamp or otherwise endorse in writing all sets of approved plans, specifications, shop drawings, and other required documents with the word "approved". One set of such approved plans and documents will be retained for the permanent property file records of the Village and one or more sets will be returned to the applicant. The permittee must maintain a complete set of approved plans and documents at the building site that must be open to inspection and review by the village's authorized inspectors at all reasonable times during construction. Other sets of approved plans will be forwarded to such other agencies as necessary or required.

D. Compliance Required Regardless Of Plan Approval. Plans approved by the building commissioner are approved with the intent that the plans and specifications comply in all respects to this title. Any omissions or errors on the approved plans or within the specifications will not relieve the applicant of his or her responsibility to comply with all applicable requirements of this title and with every other applicable law.

E. Posting of Permit. The building permit must be posted in a visible position on the street side of the structure under permit during the entire time of the construction operations.

F. Notice of Start. The permittee must give at least a 24-hour notice to the building commissioner before work is started under any issued permit.

9-1-7 Permit Conditions.

A. Payment of Fees. No permit will be issued until all fees required for such permit have been paid.

B. Required Subdivision and Utilities. No permit will be issued for the construction of any principal building until the Village Engineer has certified that the property can be properly served with village sewer and water mains. The village engineer may release the property for permit if construction improvement plans have been approved and the owner of the property, or his or her agent, has guaranteed the installation of all required construction improvements with surety bonds or other certified documents acceptable to the village, conforming to the requirements of title 10 of this municipal code and every other applicable regulation.

C. Other Agency or Department Approvals. No permit will be issued until required approvals from other agencies or departments are received by the building department.

D. Permit as License Only; Compliance With Title. A permit is only a license to proceed with the work. No permit is, nor may be construed or applied to be, authority to violate, cancel, or set aside any of the provisions of this title, except as specifically provided by approved modification or legally granted variations as described in the application and supporting documents.

E. Compliance with Permit. All work must conform to the approved application and plans for which the permit has been issued and any approved amendments thereto, except that such applications, plans, and amendments may not be construed or applied to authorize any violation of this code.

F. Compliance with Site Plan. All new work must be located and constructed strictly in accordance with the approved site plan.

G. Change in Site Plan. No site plan or part thereof may be changed, increased, or diminished in area from that shown on the official approved site plan unless a revised site plan showing such changes, accompanied by the necessary affidavit of the owner or applicant, has been filed and approved by the appropriate village authorities.

H. Completion or Removal of Structure. If a structure is not completed, for whatever cause, then the incomplete structure, including all foundations and other underground installations, must be removed and the site restored to its original condition as provided in this title.

9-1-8 Inspections.

A. Required Inspections. The building commissioner or his or her duly authorized inspectors will make all of the following inspections and all such additional inspections as the building commissioner deems necessary to enforce the provisions of this title, the Lake Bluff Zoning Regulations, and other applicable codes and ordinances:

1. After excavation has been made preparatory to any underground installation such as footings, foundations, sewers, water lines, or other underground systems.

2. After installation of underground systems and before any backfilling.

3. After installation of framing, ducts for heating and ventilation, vents, chimneys, plumbing, electrical system, fireplace firebox, flues and chimneys, prefabricated fire places, fire sprinkler systems, fuel gas piping and other installations that may be concealed in walls, floors, ceilings, attics, or other inaccessible locations and before such work has been covered by plaster, wallboard, furring, or any other material.

4. After installation of a central heating and cooling plant and its accessories and before it is placed into operation, emergency back-up power generators, accessory structures, and hardscape.

5. After all construction and cleanup work has been completed and an occupancy permit has been requested.

B. Request by Permittee. The permittee must request an inspection from the building commissioner at least 24 hours in advance of the inspection. No such request may be made until the work and the site are in full compliance with all standards applicable to the work for which the inspection is requested. The same requirements apply to all re-inspections. One re-inspection will be allowed at no charge. Subsequent re-inspections will be charged at the rate established in section 1-12-3 of the municipal code. “Re-inspection” means any additional inspection of the same work previously inspected and not approved.

C. Exposure of Covered Work. If any work is covered prior to proper inspection of it, then the building commissioner may require that such work be uncovered at the permittee’s expense so that a proper inspection can be made.

D. Inspection of Existing Conditions. The building commissioner or his or her duly authorized inspectors may to enter on all property and structures in the village during all regular village business hours and all other reasonable times for the purpose of inspecting such property and structures. No person may deny access to any premises for such inspections.

9-1-9 Time Limits.

A. Building Permits; Restoration. Any building permit issued pursuant to this title will be null and void: (1) if the work authorized by such permit has not commenced within six months after the date of issuance of such permit, or (2) if such work has begun but is suspended or abandoned for six months or longer, or (3) if work is not completed within one year or such longer time as may be stated in the permit. The building commissioner may, but is not to, extend any such time limit for six months for good cause shown, after written request for such extension and payment of a fee equal to 50% of the original total permit fee. The building commissioner may grant no more than two such extensions.

If a permit has expired and is not renewed, then all previous construction, if any, must be removed and the property restored to its original condition, and all fees paid therefor are

forfeited to the village and the permit is null and void. If the permittee does not remove all previous construction and restore the property to its original condition, then the village may complete such removal and restoration and recover all of its costs and expenses by the filing of a lien on the property or by any other legal action permitted by law.

B. Applications. Any permit application pending for more than six months for which no permit has been issued will be returned to the applicant and deemed null and void.

9-1-10 Cancellation of Permit; Return of Fees. After written request therefor from the permittee, the building commissioner may cancel any permit issued under this title and return the permit fees paid therefore provided that no development of any kind has commenced pursuant to such permit and provided, further, that the village will retain 50% of such permit fees to reimburse the village's administrative costs and expenses. This section does not authorize, and may not be construed or applied to authorize, the return of any plan review fees.

9-1-11 Revocation of Permit. The building commissioner may revoke any permit or approval issued under the provisions of this title for any of the following reasons: (a) any false statement or misrepresentation of fact in the application or on the plans and other documents on which the permit or approval was based; (b) any violation of any applicable provision of this title or any other code or ordinance, or (c) any material deviation from any approved plan, drawing, or specification.

9-1-12 Stop Work Orders.

A. Authorization. The building commissioner is hereby authorized to issue and post stop work orders to stop work on any building, structure, or premises under any of the following circumstances: (1) when work is being done without a building permit; (2) when false or incomplete information has been given to obtain a permit; (3) when a permit has been issued but the check for payment of the permit fees has been refused or otherwise not cleared; (4) when work is being performed contrary to the provisions of this title or other applicable village codes or ordinances; (5) when the permittee does not take prompt action to correct violations as provided in section 9-1-14 of this chapter; (6) when work is being done in an unsafe or dangerous manner; (7) when the conditions on the premises are unsafe or dangerous either to those working on the premises or to the general public in vehicles or afoot, or (8) for any other good or just cause as determined by the building commissioner in his sole distraction that would warrant the issuance of a stop work order to enforce village codes or ordinances or to protect public safety, health, or welfare.

B. Issuance and Effect of Stop Work Order. The building commissioner, or his or her authorized designee, may issue a stop work order either orally or in writing. If the stop work order is first issued orally, then it must be followed with a written stop work order within 48 hours after such oral order. After a stop work order has been issued, whether orally or in writing, all work or action subject to such order must be stopped immediately. The stop work order may be given to the permittee, to his or her agent, or to the person doing the work. A copy of the stop work order will be posted on the premises.

C. Unlawful Continuance. It is unlawful for any person to do any work or to take any action in violation of a stop work order. Any person, other than the building commissioner or his or her authorized designee, who removes a posted stop work order or who continues any work in or about the building, structure, or premises after a stop work order has been issued and

posted, is guilty of a violation of this section and is subject to prosecution and fines as provided in this chapter. Notwithstanding the provisions of this subsection, the permittee, after approval of the building commissioner, may do such work as is necessary to protect the public health and safety and to correct the safety hazards, code violations, or other defects complained of in the stop work order. The building commissioner will set forth the conditions under which such approval will be given to proceed.

D. Removal of Stop Work Order. A stop work order may be removed only when the building commissioner is satisfied that the safety hazards have been rectified, that the violations have been corrected, that the proper building permits have been issued, that such other action has been taken or is forthcoming to resolve the original complaints, and that proper cash bonds or other guarantees have been filed with the village. After payment of the required fee, as provided in section 1-12-3 of the municipal code, written release of the stop work order will be given to all parties who had previously received the original stop work order. The stop work order then will be removed by the building commissioner and the work may proceed.

9-1-13 Certificates of Occupancy.

A. New Buildings. No new building or structure may be used or occupied, in whole or in part, until a certificate of use and occupancy has been issued certifying that the building or structure has been completed in accordance with the approved permit.

B. Alterations; Use Changes. No part of any building or structure hereafter enlarged, extended, altered, or changed, or in which a use or ownership has changed, may be used or occupied in such part until a certificate of use and occupancy has been issued by the building commissioner certifying that the work has been completed in accordance with the provisions of the approved permit or that the use is properly authorized by, and in compliance with, applicable law. In the case of a change of ownership without work requiring a permit; a new certificate of occupancy is required.

C. Temporary Certificate of Occupancy.

1. General. When a building or project has been completed but, for good cause, minor building and site improvements that are affected by weather conditions, such as seeding or sod, final grading, asphalt or concrete work, or the like, have not been completed, the building commissioner may issue a temporary certificate of occupancy, but only after a request therefore, payment of the required fee, and posting of the required bond. No temporary certificate of occupancy may be issued except after a finding by the building commissioner that such permit will not adversely affect the health, welfare, or safety of the occupants or the general public. A final certificate of occupancy is required for all parts of the premises after completion of all work.

2. Business, Office, And Industrial. The building commissioner may issue a separate temporary certificate of occupancy authorizing use and occupation to conduct business in a business, office, or industrial structure, but only after a request therefore, payment of the required fee and bond, and testing and approval of the fire suppression and alarm systems granted in the discretion of the village's fire department and

building official; and then only if the building commissioner determines that such work will pose no immediate threat to the health, safety, and welfare of workers or of the general public. No such temporary occupancy permit creates or gives rise to, or may be construed or applied to create or give rise to, any right in the permittee to further occupy the structure. Every such permit must state that it does not create any right to a final occupancy permit and that all work undertaken pursuant to such permit is at the permittee's sole risk. No use or occupation for conducting business is permitted except after issuance of such a temporary occupancy permit.

D. Permission. The building commissioner, at his or her discretion and only after a specific request from the permittee, may give permission to the owner or his designee to place inventory, fixtures, racking, material, stock, other types of inventory, or the like in a business, office, or industrial building. This permission may be granted only if the placement of the materials will not limit the completion of construction or inspections and provided the fire suppression and alarm systems have been installed, tested, and accepted by the village fire department for granting of such permission. This permission does not allow occupation of the building or area to conduct business of any kind under any circumstances.

9-1-14 Unsafe Structures and Premises.

A. Definition; Removal Required. Any structure or premises that is, or hereafter becomes, unsanitary, deficient in exit facilities, a fire hazard, or an attractive nuisance, or that is otherwise dangerous to human life, safety, or the public welfare (such conditions hereinafter collectively referred to as "unsafe") is deemed an unsafe structure or premises. Every unsafe structure must be taken down and removed, in whole or in part, or made safe and secure, as the Building Commissioner deems necessary or as provided in this title. A vacant structure with unguarded or open doors, windows, or other openings and accessible to the general public is an attractive nuisance, a fire hazard, and unsafe within the meaning of this section.

B. Examination of Unsafe Structures and Premises. The building commissioner will examine every structure and premises reported as unsafe and will prepare a report of his or her findings.

C. Notice of Unsafe Conditions. If an unsafe condition is found in a structure or premises, then the building commissioner will serve written notice on the owner, the owner's agent, or the person in control of the structure or premises, describing the unsafe conditions found and specifying the required repairs, improvements, or actions to be taken to render the structure or premises safe or secured, or requiring the unsafe structure or portion thereof to be demolished, or such other action as is necessary to remove the hazard within a stipulated time. Such notice must require the person thus notified to declare, to the building commissioner, his or her acceptance or rejection of the terms of the notice.

D. Restoration Of Unsafe Structure. An unsafe structure may be restored to a safe condition. If the cost of the repairs or reconstruction necessary to put the structure into a safe condition is estimated by the building commissioner to exceed 50% of the fair market value of the structure in its un-restored condition, then the structure must be made to comply in all respects with the provisions of this title, the Lake Bluff Zoning Regulations, and all other applicable codes and ordinances for the construction of a new structure, including without limitation the installation of fire and life safety systems required pursuant to this title.

E. Posting Unsafe Notice. If the owner, owner's agent, or person in control of the unsafe structure or premises cannot be found, after diligent search, then the notice of unsafe condition will be sent by registered or certified mail to the last known address of one of those persons and a copy of such notice will be posted in a conspicuous place on the structure or premises.

F. Disregard Of Unsafe Notice. After refusal or neglect of the person served with a notice of unsafe condition to comply with the requirements of the notice to abate the unsafe condition, the village may institute the appropriate legal action to compel compliance with the order.

9-1-15 Emergency Measures.

A. Vacating Structures. When, in the opinion of the building commissioner, there is an immediate danger of failure or collapse of a structure or any part thereof that would endanger life, or when any building or structure has collapsed and life is endangered by the continued occupation of the structure, the building commissioner may order and require the occupants thereof to vacate the structure forthwith. In that case, the building commissioner will cause to be posted, at each entrance to such structure, a notice reading "DANGER" and stating that the structure is unsafe and its use or occupancy has been prohibited. It is unlawful thereafter for any person to enter such structure except for the purpose of making required repairs or demolishing the structure.

B. Temporary Safeguards. When, in the opinion of the building commissioner, there is an immediate danger to life, property, or the safety of the general public by a collapse or failure of a structure or by other unsafe conditions on or in the structure or premises, the building commissioner immediately may cause the necessary work to be done to render such structure or premises or parts thereof temporarily safe or inaccessible to the general public.

C. Closing of Streets and Buildings. When necessary for public safety, the building commissioner may close sidewalks, streets, buildings, and structures temporarily and prohibit them from being used.

D. Emergency Work. For the purposes of enforcement of this section 9-1-15, the building commissioner may employ and obtain the necessary labor, equipment, services, and materials, whether through existing village resources or through outside contractors and vendors, to perform the required work as expeditiously as possible.

E. Costs of Emergency Work. All costs incurred by the village in the performance of emergency work pursuant to this Section 9-1-15 will be billed to the owner of the premises. If the owner of the premises does not, or cannot, promptly pay said bill, then the Village may pursue any and all appropriate legal action against the owner for the recovery of such costs, including without limitation causing a lien for such costs to be filed against the property.

9-1-16 Moving Buildings.

A. Mover's License Required; Fee, Bond. It shall be unlawful for any person, except a licensed house mover, to remove or move any building within the corporate limits of the village, and every person shall' before engaging in such occupation obtain a license therefore from the village clerk. No license shall be granted before the party applying therefore shall have

paid a fee ("moving license fee") as provided in section 1-12-3 of the municipal code and shall have provided a bond in the sum of five thousand dollars ($5,000.00) with good and sufficient sureties, to be approved by the building commissioner. Said bond shall be conditioned, among other things, that said party shall pay any and all damages which may happen to any tree, pavement, street or sidewalk, or any poles, wires or boxes, or any other property belonging to the village, whether said damages or injury shall be inflicted by said party or its agents, employees or workmen, and that said party shall indemnify and hold the Village harmless against all liabilities, judgments, costs and expenses which may in any wise accrue against the village in consequence of the granting of such license or permit hereinafter provided, and shall in all things strictly comply with the conditions of his permit. The party securing such a permit shall also be responsible for any and all acts of negligence of omission, and be responsible for all damages or destruction to public and private property alike caused by its negligence.

B. License Issuance; Moving Permit; Fee. Upon payment of the moving license fee, execution of said bond and its acceptance by the village president, a license shall be issued by the office of the village clerk, and the person so licensed shall in every instance, before removing any building, obtain a permit so to do so from the village clerk, and shall pay a permit fee as provided in section 1-12-3 of the municipal code. Such permit shall, in every case, be preceded by a written application therefore, in which is set forth:

1. The present location of the building to be moved;
2. The proposed route over which it is to be moved;
3. Its final location; and
4 The length of time granted for the moving of the same.

The application shall be signed by the applicant and countersigned by the village president, whereupon the said village clerk shall issue a permit stating therein specifically all of the conditions which are to govern the said house mover in the moving of the building, prescribing the route to be taken, and limiting the time for the removal; provided, however, that these sections herein of this Title 9, shall not apply to the moving of buildings from one point upon any lot to any other point upon the same lot where, in such removal, the building or buildings so moved shall not be moved in, over, or upon any of the streets, alleys, avenues, or other public places property in the village.

C. Warning Devices Required. On each and every night while any building remains on any street, alley, or other public place, such property, the house mover shall place, or cause to be placed, at each corner of such the building, a red light which shall be so placed at dusk and kept burning and exposed to view until sunrise in addition to any other requirements of any statute of the State of Illinois.

D. Failure To Obtain Permit or License; Penalty. Any person who shall move any building upon any street, avenue, or alley or other public place property in the village, without having first procured a license and permit as hereinbefore provided, in this section 9-1-16, or shall violate any of the provisions of this section 9-1-16, shall be deemed guilty of an unlawful act, and shall be subject to penalties as provided in section 9-1-22 of this chapter. Any building being moved by such a person in without a license and a permit on any of the streets, avenues, alleys, or other public places in the village by such licensed person not having the required permit shall be deemed a nuisance.

E. Exceeding Time Limit; Penalty, The owner of any building, or the contractor for its removal, either or both of them, who shall suffer any such cause a building to be or remain

on any of the village's streets or alleys, or upon any of the public property of the village, for any time longer than may be specified in the removal permit, shall be deemed guilty of an unlawful act, and shall be subject to penalties as provided in section 9-1-22 of this chapter, and such building shall be deemed a nuisance subject to abatement by the village authorities.

9-1-17 Building Numbers and Addresses.

A. Numbering. All buildings fronting upon public streets, avenues and thoroughfares within the village shall be numbered in accordance with the system of numbers, and the official house numbering map of the village as designated from time to time by resolution of the board of trustees and as located in the village hall, and the numbers marked on said map for that purpose shall be adopted as the basis for numbering said buildings. The numbers on said map set opposite the respective lots on said Map are adopted as the number of the building location on said lot, or in case there is more than one building on any lot, the number found on said map nearest the main entrance of said building shall be adopted as the number for said building. The number assigned, and street named used shall be based upon the front door or the building, and not on the front as designed in the zoning regulations.

B. Size of Figures. Each of the figures for said numbers shall be not less than four inches (4") in length, and so marked and located as to be distinct and easily read from the public street side of said building.

C. Violations; Penalty. The owner of any property failing to so number the buildings on his lot, as required by this Section, shall be subject to penalties as set forth in section 9-1-22 of this chapter."

9-1-18 Demolitions.

A. Definition. For the purposes of this section 9-1-18, "demolition" shall mean any act or process within the control of the owner of any building or structure that: (i) results in a change to the footprint of the building or structure; (ii) removes or destroys the structure or building; (iii) removes, destroys, or otherwise involves construction activity impacting 1,000 square feet or more of the interior of the structure or building; or (iv) removes or destroys 50 percent or more of the "gross floor area," as defined in section 10-1A-1 of the municipal code, of the structure or building**.**

B. Demolition Permit Required. A demolition permit from the building commissioner shall be required for all demolitions.

C. Demolition Site Management Plan.

1. Principal Buildings and Structures:

a. For demolitions of up to and including 500 square feet of the gross floor area of a principal building or structure, the applicant shall submit a demolition site management plan as part of the demolition permit application if the building commissioner determines that a plan is necessary to adequately monitor and regulate the specific demolition.

b. For demolitions of 501 square feet or more of the gross floor area of a principal building or structure, the applicant shall submit a demolition site management plan as part of the demolition permit application.

2. Accessory Buildings and Structures:

a. A demolition site management plan is not required for demolitions of 150 square feet or fewer of gross floor area of an accessory building or structure.

b. For demolitions of 151 square feet up to and including 500 square feet of the gross floor area of an accessory building or structure, the applicant shall submit a demolition site management plan as part of the demolition permit application if the building commissioner determines that a plan is necessary to adequately monitor and regulate the specific demolition.

c. For demolitions of 501 square feet or more of the gross floor area of an accessory building or structure, the applicant shall submit a demolition site management plan as part of the demolition permit application.

D. Demolition Site Management Plan; Approval; Content. The required demolition site management plan shall be reviewed and approved by the building commissioner prior to the issuance of any demolition permit. Every demolition site management plan shall, at a minimum, include the following:

1. A scaled sketch plan map of the site depicting the structure, or portion thereof, to be demolished;

2. A depiction of the on-site access routes for vehicles, equipment, and personnel;

3. A depiction of the on-site location of dumpsters or other waste containers, construction fencing, public and private utilities, and storm water management fencing or other storm water management devices;

4. A description of dust control measures to take place during structure removal, other demolition activities, and any other significant dust-generating activities;

5. A tree survey showing the location and size of trees, as described in section 10-11-3 of the municipal code, on the site and the proposed location for tree protection fencing, if necessary;

6. A description of off-site access routes and the location of parking for demolition equipment, hauling trucks, crew member vehicles, and additional equipment;

7. A description of site-specific measures or features, not otherwise required in subsections one through six of this section 9-1-18D, proposed to minimize adverse impacts of the proposed demolition activities on neighboring properties, public facilities, and public and private utilities and property;

8. A description of any other measures specifically required by the building official to reasonably minimize adverse impacts of the demolition activities on neighboring properties, public facilities, and public and private utilities and property; and

9. A restoration plan and schedule for repairing and restoring, to village standards, any public property, streets, sidewalks, rights-of way, parkways, utilities, and any private property, utilities, and structures impacted or damaged, by or as a result of, the proposed demolition activities.

E. Demolition Permit Fees. The fees for demolition permits required pursuant to this Section shall be those established and listed in section 1-12-3 of the municipal code.

F. Successive demolitions are cumulative. All demolition activities taking place on a single site within any consecutive 36-month period shall be deemed cumulative for the purposes of determining the required permits, plans, and fees under this Section 9-1-18F, unless the building commissioner determines in writing that such demolition activities are the result of unforeseeable circumstances.

G. Deposit Required. A cash deposit or surety bond shall be submitted along with the demolition permit application. The delivery, use, and disposition of all deposits or surety bonds required under this section shall be governed by section 7-1-4 of the Municipal Code, provided, however, that no deposit or surety bond shall be returned prior to the satisfactory completion of the demolition, as determined by the building commissioner.

H. Significant Demolition Applications.

1. Definition. A "significant demolition application" shall be any application for a demolition permit that (i) proposes to destroy or remove, in whole or in part, at least 50 percent of the gross floor area of a structure or building originally constructed 50 years or more prior to the date on which the building official deems the application complete ("application completion date"), and (ii) that proposes, in whole or in part, to destroy, alter, or otherwise change the exterior elements or appearance of the structure or building.

2. Historic Preservation Commission. All significant demolition applications shall be submitted to the historic preservation commission within 10 days after the application completion date.

3. Application Completion; Utilities. No significant demolition application shall be deemed complete unless and until the application meets the requirements of this title including, but not limited to, the payment of all applicable fees and the submission of any site management plan and deposit required by this title. A significant demolition application may be deemed complete by the building official prior to receipt by the village of disconnection notices from providers of utilities to the structure or building; provided, however, that no permit to demolish or remove a structure shall be issued until receipt by the village of all required disconnection notices from providers of utilities to the structure or building.

4. Gross Floor Area. For the purposes of this section, the term "gross floor area" shall be as defined in section 10-1A-1 of the municipal code.

5. Historic Preservation Commission Review.

a. 90-Day Review Period. The historic preservation commission shall have 90 days after the application completion date to receive applications for landmark nominations for the building or structure that is the subject of the significant demolition

application. Nomination applications shall be filed pursuant to the historic preservation procedures contained in title 13.

b. Extension of 90-Day Review Period. Prior to the expiration of the 90-day period, the historic preservation commission may, in its sole discretion, extend the time period for receipt of nominations up to an additional 30 days, for a total review period not to exceed 120 days after the application completion date. In the event the historic preservation commission extends its review beyond the 60-day period, the village shall provide notice of the extension to the owner of the structure or building that is subject to the significant demolition application.

c. Early Termination of Review Period. Notwithstanding paragraphs (a) and (b) of this subsection 9-1-18H5, the Commission shall terminate its review at any time in the event it determines that the building or structure that is the subject of the Significant Demolition Application does not satisfy the landmark designation criteria set forth in the Historic Preservation Ordinance.

d. Posting of Signage Regarding Review. Within five days after the application completion date, the village shall cause signage to be displayed at the building or structure which is the subject of the significant demolition application including the following information: (1) that a significant demolition application has been received for the building or structure; (2) that the historic preservation commission is conducting a review period to allow for the submission of an application for designation of the building or structure as a village landmark, and (3) the date, time and location of the meeting(s) at which public comment will be heard by the historic preservation commission concerning the demolition of the building or structure and any application(s) received by the village for designation of the building or structure as a village landmark.

6. Permits for Significant Demolitions. Except as provided in section 9-1-18H7 with regard to public safety emergency permits, a permit for a significant demolition application shall not be issued, until:

a. The latter of (i) the expiration of the period of time for receipt of a landmark nomination application by the historic preservation commission as set forth in section 9-1-18H5a, or (ii) the final disposition of a landmark nomination pursuant to title 13; or

b. The historic preservation commission, pursuant to section 9-1-18H5c, determines that the building or structure does not satisfy the landmark designation criteria set forth in title 13.

7. Emergency permit. A demolition permit may be issued by the building official upon the building official's determination that demolition of the building or structure is necessary to eliminate or prevent a threat to public safety. If the building official makes that determination on a significant demolition application, the application shall not be submitted to the historic preservation commission as otherwise required by this section and the permitting requirements of section 9-1-18H6 shall not apply.

9-1-19 Unlawful Acts. It is unlawful for any person, firm, or corporation to erect, construct, alter, extend, repair, replace, remove, demolish, move, use, or occupy any building, structure, equipment, device, or system regulated by this title, or cause same to be done, in

conflict with or in violation of any of the provisions of this title or any other applicable code or ordinance of the village or other agencies of jurisdiction.

9-1-20 Notice of Violations. The building commissioner will serve a written notice of violation, or order to comply, on the person, firm, or corporation responsible for the erection, construction, alteration, extension, repair, replacement, removal, demolition, move, use, or occupancy of any building or structure performed (a) in violation of the provisions of this title, or (b) in violation of any approved document or plan filed with the village to secure a building permit or certificate issued under the provisions of this title, or (c) in violation of any applicable ordinance, statute, or law of the village or any other agency having legal jurisdiction over the performance of the work being done. The notice of violation, or order to comply, will direct the discontinuance of the illegal action or condition and the abatement of the violations, and will provide a time period for discontinuance or abatement which is appropriate for the condition.

9-1-21 Prosecution of Violations. If a notice of violation or order to comply is not complied with promptly, then the building commissioner will issue a stop work order as provided for in section 9-1-14 of this chapter. The stop work order may not be removed until all violations complained of have been corrected and the fee as provided for in section 1-12-3 of the municipal code has been paid. If the permittee or his or her agents refuse or are unable to correct any violation, then the village will institute the appropriate proceedings at law or in equity to restrain, correct, or abate such violations or to require the removal or termination of the unlawful act complained of in the violation notice.

9-1-22 Penalties.

A. General Penalty. Any person, firm, corporation, or entity which violates any of the provisions of this title or other applicable codes or ordinances of the village, or who disobeys, omits, neglects, or refuses to comply with, or who resists the enforcement of, any of the provisions of this title, applicable village codes and ordinances, the approved plans and documents of the building permit, or any certificate or other permit issued under the provisions of this title, shall be guilty of an offense and punished by a fine of not less than $150 or more than $750 for each provision of this title violated. Each day on which such violation continues shall be considered a separate offense.

B. Special Penalty for No Permit. In addition to every other penalty provided by law, any person, firm, corporation, or entity that undertakes any work for which a permit is required by this title without first having secured a permit authorizing such work will be fined a sum of money at least equal to two times the full amount of the building or other permit for such work. Such fine is in addition to the required fee.

C. Stop Work Orders. Any person who shall continue any work after having been served with a stop work order, except such work as that person is directed to perform to remove a violation or unsafe condition, shall be liable to a fine of not less than $150 or more than $750 for each offense payable to the village. Each day on which such violation continues shall be considered a separate offense."

9-1-23 Abatement of Violations. The imposition of the penalties herein prescribed does not preclude the village from instituting appropriate action to prevent unlawful construction, or to restrain, correct, or abate a violation, or to prevent illegal occupancy of a building, structure, or premises, or to stop an illegal act, conduct, business, or use of a building or structure on or about any premises.

9-1-24 Interpretations; Appeals.

A. Authority of the Building Commissioner. The building commissioner may render interpretations of the provisions of this title and of any rule, regulation, or condition issued or imposed pursuant to it.

B. Purpose Of Interpretations. The interpretation authority established by this section is intended to recognize that the provisions of this title cannot possibly address every specific situation to which they may have to be applied. Many such situations, however, can be readily addressed by an interpretation of the specific provisions of this title in light of the general and specific purposes for which those provisions have been enacted. Because the interpretation authority herein established is an administrative rather than a legislative authority, it is not intended to add to or to change the essential content of this title, but rather is intended only to allow authoritative application of that content to specific cases.

C. Procedure. Any person who seeks an interpretation must file a written application therefor with the Village's building department stating specifically the title provisions at issue and the facts and circumstances related to such person's request for an interpretation. The building commissioner will make a decision in writing on such interpretation and provide that written decision to the applicant within 30 days after the application is filed. Any failure of the building Commissioner to act within 30 days, or within such further time to which the applicant may agree, will be deemed to be a decision denying the application rendered on the day immediately after that 30-day period.

D. Appeals.

1. Right to Appeal. A decision by the building commissioner on an interpretation under this section, or on the application of a provision of this title, may be appealed to the architectural board of review by the filing of a written application for an appeal with the village administrator.

2. Scheduling. Within 10 days after an appeal has been filed pursuant to this section, the building commissioner must set a date and time for a meeting before the architectural board of review. The meeting must take place within 30 days after the appeal has been filed.

3. Postponement. The appellant has the right to request one postponement of the meeting. If a request is made, then the building commissioner must set the meeting for a date no more than 30 days after the first-established date.

4. Meeting Procedures. The architectural board of review may adopt procedures governing the procedure for its meetings. Those procedures must be consistent with the following standards:

a. The procedures need not require compliance with strict rules of evidence, but must mandate that only relevant information be received.

b. Meetings must be open to the public. There is no requirement that members of the public be allowed to speak at a meeting.

c. The appellant, the appellant's representative, the village, and any person whose interests are directly affected must be given an opportunity to be heard and may submit documents in support of their position.

d. At a meeting, the architectural board of review may receive testimony and review documents and other relevant materials.

e. The building commissioner may participate fully in all proceedings, but has no vote on any decision.

5. Decisions. The architectural board of review must issue a written decision within 15 days after the conclusion of the meeting on appeal. That decision must be transmitted promptly to the appellant. A failure of the architectural board of review to issue a written decision within 15 days will be deemed a denial of the appeal. All decisions by the architectural board of reviews are final.

9-1-25 Fees.

A. General. No permit to begin work for new construction, alterations, replacement, removal, demolition, relocation, or other building construction operations or work requiring a building permit will be issued until after the fees required for that permit, as prescribed in section 1-12-3 of the municipal code, have been paid in full to the village. In addition, no amendment to a permit for which an additional fee must be paid as prescribed in this chapter will be approved until after the additional fee has been paid in full to the village.

B. Basis of Fees. Building permit fees are based, as provided in this chapter, on the size of the project and the cost of total construction.

C. Additional Fees. The payment of the fees for the construction, alteration, replacement, removal, demolition, relocation or other building construction operations and for all other work done in connection with or concurrently with the work contemplated by a building permit does not relieve the applicant or holder of the permit from the obligation to pay all other fees prescribed by law or ordinance.

D. Site Performance; Cash Deposit.

1. Deposit Requirement. Every applicant must post with the Village, at the time of issuance of a permit, a site/performance cash deposit.

2. Village Right to Draw on Deposit. The village has the right at all times, at its option, to draw on the site/performance cash deposit to reimburse the village for the costs, including without limitation legal fees and administrative expenses, actually incurred and reasonably estimated to be incurred by the village in exercising any of its rights under this title in the event (1) the applicant undertakes any work in violation of any provision of this title or of any permit issued or plan approved pursuant to this title or (2) the applicant fails or refuses to complete the work authorized by any permit issued under this title in accordance with all plans approved in connection with said permit.

3. Replacement of Deposit. If the village draws on the site/performance cash deposit, then the applicant must replenish the deposit to the full amount required by this section

within five days after demand therefor is made to the applicant in writing by the village. Any failure of the applicant to fully replenish the deposit will result in cancellation of the related permit, which permit will not be reissued thereafter except after the filing of a new application and paying the required fees therefor.

4. Return of Unused Deposit. The village will promptly return any unused portion of the site/performance cash deposit to the applicant, without interest, as follows:

a. For all work other than a temporary sign, after proper completion of all work.

b. For a temporary sign, after removal of such sign, but only if that removal occurs within 48 hours after the permit for the temporary sign has expired. If removal occurs later than 48 hours after the permit expired, then the site/performance cash deposit is forfeited to the Village.

5. Forfeiture of Deposit. A site/performance cash deposit posted pursuant to subsection 1 of this section shall be forfeited to the village in full (1) if the permittee does not request a final inspection prior to the expiration of the permit for which the deposit was made, or (2) if the permittee does not cure all defects in the performance of the work pursuant to the permit for which the deposit was posted within 30 days after the specified date for completion; or (3) if the permittee occupies the building or any portion of the building without written permission or certificate of occupancy.

# CHAPTER 2
# INTERNATIONAL BUILDING CODE

9-2-1 Adoption of International Building Code: The International Building Code, 2009 Edition, as promulgated and published by the International Code Council, Inc. ("International Building Code"), is adopted by reference by the Village of Lake Bluff as modified in Section 9-2-3 for the purpose of regulating the erection, construction, enlargement, equipment, alteration, repair, moving, removal, demolition, conversion, use, height, area and maintenance of all buildings and structures in the Village of Lake Bluff. The International Building Code shall apply to all buildings and structures within the Village, except for single-family detached dwellings and two-family dwellings and all buildings and structures accessory thereto to the extent that such dwellings are expressly regulated by the International Residential Code, as adopted by the Village and amended pursuant to Chapter 3 of this Title.

9-2-2 International Building Code on File: Complete printed copies of the International Building Code are available for public use and inspection at the Office of the Village Clerk, Village Hall, Lake Bluff, Illinois.

9-2-3 Amendments to the International Building Code: The International Building Code, adopted by reference pursuant to this Chapter 1 is amended as set forth in this Section 4-1-7. Subsequent section numbers used in this Section shall refer to the like numbered sections of the International Building Code.

101.1 Delete "[NAME OF JURISDICTION]" and replace with "The Village of Lake Bluff, Illinois"**.**

101.2 Delete Exception.

101.4 In first sentence, delete "Sections 101.4.6" and replace with "101.4.7".

101.4.3 Delete the term "International Plumbing Code" and replace with "Illinois Plumbing License Law, 225 ILCS 320/0.01 *et seq*., and the regulations adopted thereunder ("Illinois Plumbing Law"), as adopted by the Village and amended pursuant to Chapter 6 of this Title. Insert after the first sentence: "Every reference to the ICC International Plumbing Code in the International Building Code shall mean and refer to the Illinois Plumbing Law." Delete the entire last sentence of the section without substitution.

101.4.7 Add the following new Section 101.4.7:

**"**101.4.7 Electrical. The provisions of the 2011 Edition of the National Electric Code (NFPA 70) as adopted by the Village and amended pursuant to Chapter 7 of this Title ("Electric Code"), shall apply to the installation of electrical systems, including alterations, repairs, replacement, equipment, appliances, fixtures, fittings and appurtenances thereto. Every reference to the ICC Electrical Code in the International Building Code shall mean and refer to the National Electric Code."

101.4.8 Add the following new Section 101.4.8:

"101.4.8 International Building Code Commentary. The narratives in the preface to International Building Code shall apply, as a supplement, to the International Building Code."

.

105.2 Delete Section 105.2.

105.5 Delete Section 105.5.

105.7 Delete Section 105.7 and replace as follows:

"105.7 Posting of Permit. Permit placard is to be posted on the site of operations, visible at all times from the street until the final inspection is completed. One copy of the architectural plans approved by the Village with all requirements noted for contractors and inspectors reference is to be on site at all times through out construction."

105.8 Add new Section 105.8 as follows:

"105.8 License. No person, firm, partnership, corporation, or other entity shall engage as a general contractor, or subcontractor for electrical, plumbing, heating, air conditioning, sewer work, water, septic or sewage disposal systems, storm sewer, fence, concrete, driveway, patio, roadway, or construction work of any nature and description in the Village, unless licensed to do business in the Village. Fees for such licenses shall be set forth in Section 1-12-3 of the Municipal Code."

105.9 Add the following new Section 105.9:

"105.9 Public sanitary, storm and water improvements required. No permit shall be issued for the construction of any building for habitation, on any existing lot or existing parcel of land within the corporate limits of the Village, unless the lot on which the building is located is directly served, or is proposed to be directly served as part of the construction project, by a public water main, storm sewer and a public sanitary sewer approved by the Village. The term "directly," as used in this Section 105.9, shall mean that the public water main, storm sewer and public sanitary sewer extends to the portion of the right-of-way immediately adjacent to the lot on which the proposed building activity is to occur, or the public water main, storm sewer and public sanitary sewer extends along an approved and recorded public water and sewer easement to a location directly adjacent to the lot on which the proposed building activity is to occur."

Exceptions: This provision does not apply to a proposed project: (1) on a lot or parcel of land having an area of two and one-half acres or more, (2) on a lot separated from the existing public water and sewer main by a railroad, or (3) on a lot no portion of which is located closer than 1,000

feet to a public water main and public sanitary sewer, provided that an approved well permit and septic permit has been issued from the Lake County Department of Public Health and evidence of such permits have been provided to and approved by the Village."

107.2.5 Add the following after the last sentence of Section 107.2.5:

"In addition to the site plan requirements of Section 9-1-5H of this Chapter, the following items shall be submitted in triplicate to the Village's Engineering and Building Department, prepared and sealed by an Illinois Registered Professional Engineer:

1. A 24" x 36" plan/plans showing the following at an acceptable engineering scale:

a) All proposed site and utility work;

b) All existing utility mains, service lines, manholes, property lines, driveways, valves, fire hydrants, power lines/poles etc;

c) Benchmark and elevations converted to U.S.G.S. ("United States Geographical Survey") format;

d) Existing and proposed grades and / or contours at one foot intervals on the site as well as a minimum of fifty feet (50') in to the adjacent properties, including a plan for control of soil erosion and sediment, and a tree protection plan for the project; and

e) Location size, and species of all trees on the lot.

2. Specifications (or notes on plans) controlling the proposed work.

3. Plat of survey, with scale, signed, and sealed by an Illinois registered land surveyor.

4. Wetland Affidavit- signed and notarized.

5. Parking – Designation of all parking areas, with dimensions for public, handicapped, employee and fire lanes, parking aisles, and parking spaces.

6. Storm Water Management plan with on site storm water detention facility of detention system to which the site drains, including storm water detention calculations.

7. Traffic study, if applicable, for access roads and interior roads.

8. Flood plain / Wetland mitigation – flood plan design if applicable and wetland mitigation plan if applicable for the project site.

9. Permits, if applicable for the following:

a) I.E.P.A. for sewer and water extensions.
b) Lake County Department of Transportation
c) I.D.O.T Highway

109.2 Delete the phrase “the schedule as established by the applicable governing authority” and replace with the phrase “Section 1-12-3 of the Municipal Code”. Add the following at the end of the Section:

"The Village shall be reimbursed for additional costs related to more than two inspections for any specific type of inspection required by permit. Fees for re-inspections shall be as provided in Section 1-12-3 of the Municipal Code".

110.3.11 Add the following new Section 110.3.11:

**"**110.3.11. Schedule of Inspections. It shall be the responsibility of the contractor to request and receive approval of the following work, or any construction work, before proceeding to the next phase of new construction:

1. Site inspection before start of construction to verify site requirements in place and construction fencing installed;

2. Excavation and footing;

3. Foundation, footing tile and damp proofing;

4. Interior plumbing;

5. Electrical;

6. Heating;

7. Steel and rough framing;

8. Insulation, Draft stopping, Fire stopping;

9. Sewer Systems;

10. Water Service;

11. Fire and Life Safety Systems; and

12. Final Inspection on completion.

An original survey by a Registered Illinois Land Surveyor shall be submitted to the Building Department immediately after the installation of the foundation. The survey shall indicate all property lines, easements, and all building lines of record. The survey shall indicate the legal description of the premises, be drawn on paper not smaller than 14" x 18" to a scale of not less than 30 feet to the inch and shall describe to the nearest one tenth of a foot, the size, shape and location of each structure on the premises, as well as the distances of the structures from the front, side and rear lot lines.

When a permit is issued for the construction remodeling, repair or alteration of any building, the building official shall advise the contractor in writing of the site requirements and inspections required for the particular work involved. The contractor shall then be responsible to complete and maintain site requirements, request inspections and receive approval of each phase of construction. The contractors shall have a representative at the site during the inspections."

110.7 Add new Section 110.7 as follows:

"Section 110.7 Structural Tests and Special Inspections: The Building Official, in his or her sole discretion, may, in addition to those requirements for structural tests and inspections set forth in Chapter 17 of this International Building Code, require certain additional structural tests and special inspections and information, including without limitation construction documents, plans, specifications, inspections and testing, for situations that are special or unique to a particular construction project including without limitation bluff and ravine projects, pools, beach projects, piers, trams, cellular towers, monopoles or similar communications equipment and facilities, and stairs on bluffs and ravines."

111.1 Add the following phrase at the end of the first sentence: "and the fee paid as set forth in Section 1-12-3 of the Municipal Code."

112.4 Add the following new Section 112.4:

"Section 112.4 Private sewage disposal systems. All private sewage disposal systems and wells must be approved by the Lake County Health Department and the Village and must be constructed and maintained in compliance with all applicable Village, county and state regulations."

113.1 Delete Section 113.1 and replace as follows:

"113.1 General. The Village Architectural Board of Review shall hear and decide appeals of orders, decisions, or determinations made by the building official relative to the application and interpretation of this International Building Code."

114.4 Delete "as prescribed by law" and replace with "as provided in Section 9-1-22 of this Title."

115.3 Delete Section 115.3 and replace as follows:

"115.3 Unlawful Continuance. Any person who shall continue any work in or about the structure after having been served with a stop work order, except such work as that person is directed to perform to remove a violation or unsafe condition, shall be liable for penalties as provided in Chapter 13 of this Title."

301.1 Delete Section 301.1 and replace as follows:

"301.1 Scope. The provisions of this article shall control the classification of all buildings and structures as to use. SOME USE GROUPS AND SPECIFIC USES MAY BE PROHIBITED BY THE ZONING ORDINANCE AND OTHER ORDINANCES OF THE VILLAGE OF LAKE BLUFF, or are permitted only as provided in a SPECIAL USE PERMIT approved and adopted by the Corporate Authorities of the Village."

302.2 Add the following new Section 302.2:

"302.2 Separations. All A-1, A-2, A-3, A-4 and A-5, R-1, R-2, R-3, R-4 and I-1, I-2, I-3 and I-4 use classifications shall be separated from any use group classification by a minimum of a two hour U.L. listed masonry or concrete assembly."

401.1 Delete Section 401.1 and replace as follows:

"401.1 Detailed use and occupancy requirements. In addition to the general requirements of this code and the Village Zoning Regulations (Title 10) governing the location, construction and equipment of all buildings and structures and the fire resistance ratings, height and area limitations as set forth in this code, the provisions of this Building Code shall control all building and structures designed for special uses and occupancies."

424 Add the following new Section 425:

Section 425 Vacant Buildings

424.1 Maintenance of Vacant Buildings. All windows, doors, and glass areas of nonresidential buildings or structures, or portions thereof, that are vacant for a period of 14 days or more shall be treated to prevent any view into the interior of the building or structure by either of the following methods:

1. The uniform use of horizontal or vertical blinds, which blinds shall be either white or opaque in color; or

2. The use of professionally applied adhesive film.

No other method to prevent any view into the interior of a vacant nonresidential building or structure, including without limitation the use of window soap, boards, paper, or plastic sheeting, shall be permitted unless approved by the building code official."

503.1 Delete Section 503.1, including subsections 503.1.1 through 503.1.3, and replace as follows:

"503.1 General. The areas and heights of all buildings and structures in the Village of Lake Bluff are set forth in Title 10 of the Municipal Code ("Village Zoning Regulations"), except that no building or structure may be constructed more than two stories nor more than 25 feet in height except for single family residences, schools, churches, or a municipal building. Any reference in this code to buildings or structures which exceed these limits shall not be applicable unless otherwise permitted by the Village Zoning Regulations. Type V construction shall not be allowed for Use Groups R-1, R-2, I-1, I-2, I-3 and I-4 and all new non one and two family dwelling buildings; new mixed use buildings shall comply. No combustible construction allowed in Type III. All new non one and two family residential buildings and mixed use buildings shall be of non-combustible construction and any framing members shall be of non-combustible construction."

602.3 Add the following exception at the end of Section 602.3**:**

"Exception: In mixed use, non-residential, commercial and residential buildings, floor assemblies separating commercial from residential and residential from other uses shall be of noncombustible construction. Fire-retardant-treated wood shall not be used for stairs."

706.3 Delete Section 706.3, including Exception, and replace as follows:

"706.3 Materials: Fire walls in all construction types shall be masonry.

903.2.1 Add the following at the end of Section 903.2 Where Required and delete the exception:

"903.2 Automatic fire sprinkler system required.

1. Notwithstanding anything contained in this International Building Code to the contrary, in all areas of the Village, automatic fire sprinkler systems must be installed and maintained in all newly constructed buildings.

2. Any existing building (other than single family and two family residential dwellings) that undergoes any work or renovations that requires a building permit, has a change of use or occupancy type, or is improved with an addition to the building shall be required to add an approved fire sprinkler system if the fire sprinkler system would be required by the applicable sections of the 2012 International Existing Buildings Code. Except as otherwise specifically prescribed, complete automatic fire sprinkler systems shall also be installed wherever specified by this International Building Code.

3. All existing non-residential buildings, mixed use buildings and multi-family residential buildings with more than two residential units, shall provide a complete automatic fire sprinkler system by January 1, 2026, except that existing churches (A-3 Use Group Section 303) are exempt.

4. Whenever access to a building or structure will be unduly difficult because of secured openings, and where immediate access will be required for life saving and fire protection purposes, the fire code official may require an approved key box to be in a readily accessible location approved by the fire code official."

907.2 Delete Section 907.2 and replace as follows:

"907.2 Where required. Notwithstanding anything contained in this International Building Code to the contrary, all newly constructed buildings, renovation and remodeling, change of occupant, change of ownership or additions thereto in non-residential zoned areas of the Village and mixed use buildings and other buildings in residential zoning districts, and all newly constructed attached residential dwellings consisting of more than two units, or additions thereto, shall have installed and maintained therein, an automatic fire alarm system. Except as otherwise specifically prescribed, complete automatic fire alarm systems shall also be installed wherever specified by this Code."

907.2.10.4 Add the following new Section 907.2.10.4:

"907.2.10.4 Failure to Install. The following shall constitute a violation of this Section 907:

1. Failure to install or maintain in operating condition any smoke detector required by this Section;

2. Tampering with, removing, destroying, disconnecting or removing the batteries from any installed smoke detector, except by the owner thereof of his agent, or in the course of inspection and maintenance of the detector;

3. Any act contrary to any provision of this Section or failure to fully comply with any requirement of this Section; or

4. Failure to fully comply with any notice, order, decision, permit or regulation issued by the Lake Bluff Fire Chief and/or the Building Commissioner/building official.

If a notice of violation is not complied with within 10 days, the Lake Bluff Fire Chief, Village Administrator, Building Official, or their designee may request the Village Attorney to institute the appropriate legal proceeding to restrain, correct or abate such violation or to require removal or termination of the unlawful use of the building or structure in violation of the provisions of this Section, or of any order or direction made pursuant thereto. The Lake Bluff Police Department may make such arrests for

any offense against this Section or order affecting the immediate safety of the public."

916 Add a new Section 916 as follows:

"Section 916 Knox Box"

916.1 Knox Box. All commercial buildings and residential structures with automatic fire alarms and or fire sprinkler systems require a Knox Box. Multiple knox boxes may be required by the Building Official. The Fire Department shall approve the location of **all** Knox Boxes.

917 Add a new Section 917 as follows:

"SECTION 917 CARBON MONOXIDE DETECTORS

"Section 917.1 Definitions. The following words and terms shall, for the purposes of this Section 917.1, have the following meanings:

CARBON MONOXIDE ALARM. An electrical device which meets the requirements of UL Standard 2034 for detecting and warning individuals of the presence of carbon monoxide.

CARBON MONOXIDE MONITOR. An electrical device for detecting and warning individuals of the presence of carbon monoxide. These devices do not meet UL Standard 2034 because they detect and alarm smaller quantities of carbon monoxide than UL 2034 allows.

917.2 Add new section 917.2 as follows:

"917.2 General.

1. Carbon monoxide alarms where required by this code shall meet the current UL Standard 2034 or its equivalent. Carbon monoxide alarms shall be installed per the requirements of NFPA 720 and the laws of the State of Illinois.

2. Carbon monoxide monitors where allowed by this code shall be installed and maintained per the manufacturer's recommendations."

917.3 Add new section 917.3 as follows:

"Section 917.3 Where required. Carbon monoxide alarms are required:

1. In any building with sleeping facilities that relies on combustion of fossil fuel for heat, ventilation, hot water, or fireplace within the building, and for buildings with attached garages, fossil fueled appliances, propane fuels, liquid type fuels and as required by laws of the State of Illinois. There shall be a detector locator in each sleeping room, within 15 feet of a sleeping room, every level of the building and possibly multiple detectors per level and in all mechanical rooms.

1. In existing buildings, with sleeping facilities, that area renovated or altered and the work would normally require a Village permit to accomplish, after adoption of this ordinance shall be required to install a carbon monoxide alarm per this ordinance.

2. In existing buildings with sleeping facilities that replace a furnace or hot water heater with a fossil fueled furnace or hot water heater or install a fireplace shall be required to install a carbon monoxide alarm per this ordinance.

917.4 Add new Section 917.4 as follows:

"Section 913.4 Parking garages. If a parking garage does not meet the requirements for Open Air Parking Structures (NFPA) or an Open Parking Garage (Section 406 of this Code) or in the interpretation of the building official may require a system, an automatic carbon monoxide system must be installed as follows:

1. The system must be connected to the NFPA 88A (Parking Structure) required ventilation system, where upon activation, the system will automatically turn on and exhaust fumes to the exterior;

2. The ventilation system must have manual, key operated override for emergency use. The override must be capable of turning the system on when shut down and turning the system off if activated. The required key switch and proper signage will be mounted in an easily accessible area next to the garage entrance, in a location approved by the fire department;

3. Ventilation systems must be tested annually and re-certified to manufacturers specifications at least annually. Test results shall be forwarded to the fire official."

1029.5.3. Add the following new Section 1029.5.3:

"1029.5.3 Window Well Covers. A guard rail shall be provided at grade around all window wells, or a cover provided capable of supporting 500 pounds."

1101.1 Add the following at the end of Section 1101.1:

"When there is a conflict between (i) this Chapter 11 of the International Building Code and (ii) the Illinois Environmental Barriers Act, 410 ILCS 25/1 *et seq.*, and the administrative rules adopted thereunder contained in 71 Ill. Adm. Code 400, 110 *et seq.*, also known as or the "Illinois Accessibility Code", the stricter of the two requirements shall be used."

1206.2 Delete Section 1206.2 and replace as follows:

"1206.2 Yards. The depth of a required yard shall be governed by the provisions of the Village Zoning Regulations, Title 10 of the Municipal Code."

1209.2 Delete Section 1209.2 and replace as follows:

"1209.2 Attic spaces. An access opening shall be provided to an enclosed attic by means of a scuttle or trap door not less than two feet by three feet ."

1301.1 Amend Section 1301.1 as follows:

"Section 1301.1 Criteria. Buildings shall be designed and constructed in accordance with the 2012 International Energy Conservation Code, current State of Illinois Energy Conservation Code and ANSI/ASHRAE/IESNA Standard 90.1."

1507.7.4 Add the following at the end of the Section 1507.7.7.4: "or for the first 3 feet of all eaves, whichever extends the protection the greatest distance up the roof. Ice dam protection shall be provided in all valleys at least 18 inches to either side of the valley."

1608.2 Delete Section 1608.2 and replace as follows:

"1608.2 Ground Snow Loads. Ground snow loads to be used in determining the design snow loads for roofs are not to be less than 40 pounds-force per square foot.

1808.1.1 Add the following new Section 1808.1.1:

"1808.1.1 No wood footings and foundations. The use of wood footings or foundations shall not be allowed. All references to wood footings or foundations in this Chapter and International Building Code shall be deleted."

2303.1 Add the following to the end of Section 2303.1: "The exterior walls, interior partitions, floors and roofs of wood construction shall be designed and constructed to develop adequate strength to resist all vertical and lateral forces due to both dead and live loads. Standard balloon, braced, platform and post and beam types of construction shall be acceptable framing methods. Joists, studs and rafters shall not be spaced more than 16 inches (408 mm) on center unless otherwise approved. Roof trusses in residential construction may be 24 inches (610 mm) on center. References to wider spacing in subsequent Tables and Sections of this Chapter or the International Building Code are not applicable. Three stud corners are required in all wall framing." Framing differences may be applied if applicable to use of International Green Construction Code or a LEED certified project and approved by the building official.

2304.7.3 Add the following new Section 2304.7.3

"2304.7.3 Minimum Roof Sheathing. Roof sheathing supported on 24 inch spacing is to be a minimum of 5/8 inch thick. Roof sheathing supported on 16 inch spacing shall be a minimum of 1/2 inch thick."

2308.1.2 Add the following new Section 2308.1.2:

"2308.1.1 Structural engineered wood products. A Structural Engineered Wood Product, as referred to in this Code, is defined as wood construction members other than that permitted in International Building Code "Type 4" Timber construction."

2308.1.3 Add the following new Section 2308.1.2:

"2308.1.2 Protection. When structural engineered wood products are used in floor or ceiling assemblies, they shall not be left exposed. Protection shall be provided by one of the following methods:

1. A U.L. listed fire rated ceiling assembly rated at a minimum of two hours;

2. An automatic sprinkler system designed per the current N.F.P.A. #13, Fire Sprinkler Standard, and approved by the building official or his designee, and installed by an approved licensed fire sprinkler installer permitted to work in the Village of Lake Bluff;

3. Other methods of equivalent protection acceptable to the building official or his designee.

Additionally, the area between the ceiling and the floor above shall be subdivided into areas of not more than 1,000 square feet with 5/8 inch type “X" drywall or other means acceptable to the building official or his designee when utilizing structural engineered wood products.

2701.2 Add the following new Section 2701.2:

"Amendments to NFPA 70. The 2012 edition of NFPA 70 (National Electrical Code) have been adopted for use by the Village pursuant to Chapter 7 of this Title.

2901 Delete the text of Sections 2901, 2902 and 2903 in their entirety and replace with the following:

2901.1 Delete Section and replace with the following:

"2901.1 Scope. The provisions of the Illinois Plumbing License Law, 225 ILCS 320/0.01 et seq. and the regulations adopted thereunder in 68 Ill. Admin. Code 750.100 et seq. and 77 Ill. Admin. Code 890.110 et. Seq. (collectively “Illinois Plumbing Law”) shall regulate the licensing of plumbers, the registration of irrigation contractors, and the design and installation of plumbing systems, including but not limited to sanitary and

storm drainage, sanitary facilities, water supplies and storm water and sewage disposal. The Village has adopted the Illinois Plumbing Law with amendments pursuant to Section 4-5-2 of this Title.

2901.2 Add a new Section 2901.2 as follows:

"2901.3 Amendments to Illinois Plumbing Law. The Illinois Plumbing Law is amended as set forth in Chapter 6 of this Title."

3001.1 Amend Section 3001.1 to read as follows:

"3001.1 Scope. All Elevator and Conveyance design, installation, construction, operation, inspection, testing, maintenance, alteration and repair of elevators and conveyances shall comply with Section 35 of the Elevator Safety and Regulation Act (225 ILCS 312/35) of the State of Illinois and all adopted administrative rules including but not limited to Illinois Administrative Code 1000 and all stated references in that Act and Administrative Code shall be adopted as reference as indicated in those documents. This Chapter 30 shall be applied if it is more restrictive than the Illinois Elevator Safety and Regulation Act.

3002.4 Amend Section 3002.4 to read as follows:

"3002.4 Elevator car to accommodate ambulance stretcher. In all buildings that are required to have an elevator or elevators or that are equipped with an elevator, at least one elevator shall be provided for fire department emergency access to all floors. The elevator car shall be of such a size and arrangement to accommodate an ambulance stretcher 24 inches by 84 inches with not less than 5 inch radius corners, in the horizontal, open position and shall be identified by the international "star of life" symbol for emergency medical services. The symbol shall be placed inside on both sides of the hoistway door frame."

3109.2 Delete Section 3109.2 and replace as follows:

"3109.2 Definition. The following word and term shall, for the purposes of this section and as used elsewhere in this code, have the meaning shown herein.

SWIMMING POOLS. Any structure intended for swimming or recreational bathing or wading that is capable of containing water 24 inches deep or more. This includes permanent or temporary, hard wall, soft wall or inflatable, in-ground, above-ground and on-ground swimming pools, hot tubs; spas and fixed-in-place wading pools.

3109.6 Add the following new Sections 3109.6 through 3109.13:

"3109.6 Permit Required. It shall be unlawful to proceed with the construction,. installation, enlargement or alteration of any residential swimming pool and appurtenances within the Village unless permits for such work shall have first been obtained from the building official. No permit for a swimming pool shall be granted by the building official until compliance with this Section 3109 is demonstrated to the building official's satisfaction and approved by the Board of Trustees.

3109.7 Fees. The fee for a permit for the erection or construction of a swimming pool shall be determined in accordance with the Village Comprehensive Fee Schedule contained in Title 1, Chapter 12 of the Village Code and any in ground pool shall be subject to the building permit fee not the pool permit fee.

3109.8 Plans. All drawings and plans for the construction, installation, enlargement, or alteration of any residential swimming pool and appurtenances for which a permit is required shall first be presented to the building official for examination and approval as to proper location, construction and use. All plans and drawings shall be drawn to a scale of not less than one-eighth inch to the foot (1/8" = 1'), on paper or cloth, in ink, or by some process that will not fade or obliterate. All distances and dimensions shall be accurately figured and drawings made explicit and complete, showing the lot lines, and including information pertaining to the pool, walk and fence, construction, water supply system, drainage and water disposal systems, and all appurtenances pertaining to the swimming pool. Detail plans and vertical elevations shall also be provided. All residential swimming pools, appurtenances, water supply and drainage systems shall be constructed in conformity with the approved plans. If any deviations from such plans are desired, a supplementary plan covering that portion of the work involved shall be filed for approval and shall conform to all the provisions of the code as well as ANSI/APSP-7 and recommendations as adopted and promulgated by the Association of Pool and Spa Professionals.

3110.1 Add new Section 3110.1.1

"3110.1 Vehicular gates. All automatically controlled gates across any access points to or around any property, regardless of occupancy type, shall be equipped with an operational override key switch or strobe sensor for emergency access. The strobe sensor or key switch type must be approved by the Fire Code Official. If a key lock is going to be utilized then a “knox” key box shall be installed at the gate and a key to the lock or for an over ride switch shall be in the box. A knox lock can be used in lieu of the knox box.

3201 Delete section and replace with the following:

"Section 3201 General. There shall be no encroachments allowed into any public right of way without prior approval from the Village of Lake Bluff."

3202 Delete section without replacement.

3301.3 Add the following new Section 3301.3:

"3301.3 Additional site plan requirements. Additional site plan requirements are to be determined by the building official for each permit, and may include one or more of the following:

1. Fencing is to be installed as listed on the approved site plan and shall include a gate for access and ability to enclose the site at the end of each working day. Commercial fencing is to be a minimum of six-foot high chain link fence properly supported. Residential fence is to be a minimum of a four foot high green construction fence type fence property supported;

2. All open excavated holes and drops are to be completely encircled as a minimum with a four foot high safety fencing;

3. Silt fencing is required to prevent silt from causing a nuisance to neighboring properties, discharge into the storm sewer system or creating a hazard;

4. A construction drive shall be installed at the start of the job with a gravel base to provide contractor parking to the extent possible to prevent mud and debris from being tracked onto streets;

5. Dirt and debris are to be kept off of street at all times a dumpster or trash container shall be provided throughout construction;

6. A portable toilet shall be maintained at all times, except where the building owner allows use of the existing facility. The portable toilet is to be placed to least impact the neighbors and a minimum of 10 feet off the lot line;

7. All side walks damaged during construction are to be replaced. In areas where a new home is constructed all the sidewalks along the property are to be replaced unless determined otherwise by the building official. Damaged side walks are to be replaced with a minimum of a four inch bed of compacted gravel and a minimum of five inch thick concrete panel. Side walk panels in drive areas are to be replaced with a minimum of seven inch thick concrete;

8. Sidewalks damaged during construction shall be topped with temporary bituminous pavement until final concrete can be placed;

9. Granular back fill shall be required for all street, road edge, sidewalk, driveway, slab, or patio areas as determined by the building official;

10. Any street excavation shall be topped with a temporary bituminous pavement within 48 hours of excavation. A permanent minimum of three (3) inch bituminous layer, compacted in two lifts, with saw cut edges, is required as part of the final approval. (a road opening fee per the current fee schedule will be accessed if road opening is performed);

11. Damage to parkway or neighbors property due to construction shall be repaired as soon as weather permits;

12. Traffic and parking requirements as noted on plan are to be followed throughout the construction process;

13. Temporary electric services are to be installed to prevent the use of generators;

14. Tree protection is to be installed per the site plan and may include (fencing, wrapping of trunk, root cutting before excavation trimming limbs for access, feeding, aerating, and directional boring under trees with services) as well as requirements of the tree preservation ordinance, set forth in Chapter 11 of Title 10 of the Municipal Code;

15. Materials are to be stored on private property, storage of materials in the public right of way is not permitted unless prior approval is granted by the Village;

16. Dust of any type is to be controlled by use of water or other forms of containment so not to cause a nuisance;

17. Sump discharge is to have one or more of the following: open site connection, storm sewer connection, drywell or discharge to approved area on the property. (Sump water will not be allowed to discharge to a location that will cause a hazard in freezing conditions such as drives, sidewalks, or streets);

18. As -built drawings are required for all exterior water, sanitary, and storm service lines from the foundation wall of the structure being serviced to the point of connection with the existing service stub or existing main. The as built drawing is required regardless of the length of the installation of the new portion of the utility service;

18.1 The drawing must be to scale and be no smaller than 1” = 20’. The scale must be indicated on the submitted drawings.

18.2 The drawing must be neat, clean and legible. Multiple service lines can be shown on the same drawing.

18.3 The minimum acceptable drawing size is 8-1/2” x 11”.

18.4 The pipe size and type must be indicated for each service line.

18.5 The Location of the installed service line(s) must be tied to a minimum of two exterior property corners and two exterior foundation corners within an accuracy of one (1) foot.

18.6 The locations of all fittings, cleanouts, and B-box’s must be identified within an accuracy of one (1) foot.

18.7 The depth of the utility service below final grade must be indicated at all grade and at a minimum of every 50 feet along the length of each installed service.

18.8 All prominent topographical features such as exterior build foundations lines, sidewalks, back of curb, edger of pavement and existing manholes must be indicated if these features are within 20 feet of any portion of the utility service line work covered by the building permit.

18.9 The means of connecting the new portion of the utility line to the existing main or stub must be identified (Coupling types, tees, wyes etc.)

18.10 The lower right hand corner of the submitted drawing must contain the following information: Street address where the work is being performed; the building permit number; the date of the sketch preparation; the name and address and telephone number of the general contractor and subcontractor.

19. Every new building and buildings with substantial renovation or as required by the building official, shall install a conduit from the water meter location to the street side exterior of the building. This conduit shall be used for the remote MXU wiring to the water meter.

20. All new exterior sanitary sewer cleanout covers shall be of a type and material that can be repeatedly driven over and shall not be made of a PVC material or other material that cannot withstand the weight of vehicles.

3314 Add the following new Section 3314:

"Section 3314 General Requirements

"3314.1 Working Hours.

3314.1.1 Limitation on Exterior Construction Hours. There shall be no exterior construction work, material hauling, construction equipment start-up, or idling of construction equipment or construction vehicles on any property in the Village at the following times:

1. Monday through Friday before 7:00 a.m. and after 7:00 p.m.;

2. Saturdays before 8:00 a.m. and after 6:00 p.m.;

3. Sundays and nationally recognized holidays before 9:00 a.m. and after 5:00 p.m.; provided, however, that in no event shall heavy equipment, including, without limitation, earth moving machinery, dump trucks in excess of two and one-half tons, and other similar equipment and vehicles, be operated at any time on Sundays or nationally recognized holidays.

3314.1.2 Limitation on Interior Construction Hours. There shall be no interior construction work of any kind on any property in the Village that produces noise that can be heard on any property other than the property on which such interior construction work takes place at the following times:

1. Monday through Friday before 7:00 a.m. and after 7:00 p.m.;

2. Saturdays before 8:00 a.m. and after 6:00 pm.;

3. Sundays and nationally recognized holidays before 9:00 a.m. and after 5:00 p.m.

3314.1.3 Exceptions.

1. The Village Administrator or the building official may waive any of the noise prohibitions in the event of an extraordinary circumstance.

2. The Village President, the building official, the Village Engineer, or the Village Police Chief or Fire Chief may waive any of the noise prohibitions and related time restrictions provided in this Section 3313.1 in the event of an emergency. In the event of an emergency that creates an immediate danger or hazard to persons or property, any reasonable action may be taken to eliminate the immediate danger or hazard notwithstanding any restriction in this Section 3313.1; provided, however, that such action shall be reported to any of the above-referenced Village officials within forty eight (48) hours after the action is taken.

3313.2 Removal of Debris. All waste materials shall be removed in a manner which prevents injury or damage to persons, adjoining properties and public rights of way. Adjoining streets and sidewalks shall be left broom clean at the end of each working day.

3313.3 Utility Connections. All service utility connections shall be discontinued and capped at the main in accordance with the rules and requirements of the authority having jurisdiction.

Appendix C Adopted by reference.

Appendix D Adopted by reference.

Appendix F Adopted by reference.

Appendix H Adopted by reference.

# CHAPTER 3
# 2009 INTERNATIONAL RESIDENTIAL CODE FOR ONE AND TWO FAMILY DWELLINGS

9-3-1 Adoption of the International Residential Code By Reference: The International Residential Code 2012 Edition, as promulgated and published by the International Code Council, Inc. ("International Residential Code") is hereby adopted by reference by the Village of Lake Bluff as modified pursuant to this Chapter. The International Residential Code applies to all single-family detached dwellings and two-family dwellings and all buildings and structures accessory thereto that are expressly regulated by the International Residential Code.
Each and all of the regulations, provisions, penalties, conditions, and terms of said the International Residential Code are hereby referred to, adopted, and made a part hereof, as if fully set forth in this Code with the additions, insertions, deletions and changes hereinafter prescribed.

9-3-2 International Residential Code on File: Complete printed copies of the International Residential Code, herein adopted, are available for public use and inspection at the office of the Village Clerk.

9-3-3 Amendments to the International Residential Code: The International Residential Code, adopted by reference pursuant to this Chapter 2, is amended as set forth in this Section 4-2-3. Subsequent section numbers used in this Section shall refer to the like numbered sections of the International Building Code.

R101.1 Delete Section R101.1 and replace as follows:

"Section R101.1 Title. These regulations shall be known as the International Residential Code of The Village of Lake Bluff, Illinois, hereinafter referred to as "this code.""

R105.2 Delete Section R105.2, not including Subsections 105.2.1 through 105.2.3.

R105.3 Add the following to the end of Section R105.3:

"8. The following items shall be submitted in triplicate to the Village's Engineering and Building Department, prepared and sealed by an Illinois Registered Professional Engineer:

A. A 24" x 36" plan/plans showing the following at an acceptable engineering scale:

(i) All proposed site and utility work;

(ii) All existing utility mains, service lines, manholes, property lines, driveways, valves, fire hydrants, power lines/poles etc.;

(iii) Benchmark and elevations converted to U.S.G.S. (United States Geographic Survey);

(iv) Existing and proposed grades and/or contours shall be provided at increments necessary to confirm proper site drainage as well as a minimum of 50 feet in to the adjacent properties. (include a soil erosion and sediment control, tree protection plan for the project); and

(v) Location size, and species of all trees on the lot.

B. Specifications (or notes on plans) controlling the proposed work.

C. Plat of survey, with scale, signed, and sealed by an Illinois registered land surveyor.

D. Wetland Affidavit- signed and notarized.

E. Parking – Designation of all parking areas, with dimensions for public, handicapped, employee and fire lanes, parking aisles, and parking spaces.

F. Storm Water Management plan with on site storm water detention facility of detention system to which the site drains, including storm water detention calculations.

G. Traffic study, if applicable, for access roads and interior roads.

H. Flood plain / Wetland mitigation – flood plan design if applicable and wetland mitigation plan if applicable for the project site.

I. Permits, if applicable for the following:

(i) I.E.P.A. for sewer and water extensions.
(ii) Lake County Department of Transportation.
(iii) I.D.O.T Highway."

R105.7 Delete Section R105.7 and replace as follows:

"Section 105.7 Posting of Permit. Permit placard is to be posted on the site of operations, visible at all times from the street until the final inspection is completed. One copy of the architectural plans approved by the Village with all requirements noted for contractors and inspectors reference is to be on site at all times through out construction."

R.105.9 Add the following new Section R105.9:

"Section 105.9 License. No person, firm, partnership, corporation, or other entity shall engage as a general contractor, or subcontractor for electrical, plumbing, heating, air conditioning, sewer work, water, septic or sewage disposal systems, storm sewer, fence, concrete, driveway, patio, roadway, or construction work of any nature and description in the Village, unless licensed to do business in the Village. Fees for such licenses shall be as set forth in Section 1-12-3 of the Municipal Code."

R106.2 Add the following to the end of Section R106.2: "Additional site plan requirements to be determined by the building official for each permit, and may include one or more of the following:

1. Fencing is to be installed as listed on the approved site plan and shall include a gate for access and ability to enclose the site at the end of each working day. Commercial fencing is to be a minimum of five-foot high chain link fence properly supported. Residential fence is to be a minimum of a four-foot high green construction fence type fence property supported;

2. All open excavated holes and drops are to be completely encircled at a minimum with a four-foot high safety fencing;

3. Silt fence is required to prevent silt from causing a nuisance to neighboring properties, discharge into the storm sewer system or creating a hazard;

4. A construction drive shall be installed at the start of the job with a gravel base to provide contractor parking to the extent possible to prevent mud and debris from being tracked onto streets;

5. Dirt and debris are to be kept off of street at all times a dumpster or trash container shall be provided throughout construction;

6. A portable toilet shall be maintained at all times unless the building owner allows use of an existing facility. The portable toilet is to be placed to least impact the neighbors and a minimum of 10 feet off the lot line;

7. All side walks damaged during construction are to be replaced. In areas where a new home is constructed all the sidewalks along the property are to be replaced unless determined otherwise by the building official. Damaged side walks are to be replaced with a minimum of a four-inch bed of grave and a minimum of five-inch thick concrete panel. Side walk panels in drive areas are to be replaced with a minimum of seven-inch thick concrete;

8. All side walks damaged during construction shall be topped with temporary bituminous pavement until final concrete can be placed;

9. Granular back fill shall be required for all street, road edge, sidewalk, driveway, slab, or patio areas as determined by the building official.

10. Any street excavation shall be topped with a temporary bituminous pavement within 48 hours of excavation. A permanent minimum of three-inch bituminous layer, compacted in two lifts, with saw cut edges, is required as part of the final approval. (A road opening fee per the Village Comprehensive Fee Schedule contained in Title 1, Chapter 10 of the Village Code will be accessed if road opening is performed);

11. Damage to parkway or neighbors property due to construction shall be repaired as soon as weather permits;

12. Traffic and parking requirements as noted on plan are to be followed through out construction process;

13. Temporary electric services are to be installed to prevent the use of generators;

14. Tree protection is to be installed per the site plan and may include (fencing, wrapping of trunk, root cutting before excavation trimming limbs for access, feeding, aerating, directional boring under trees with services);

15. Materials are to be stored on private property, storage of materials in the public right of way is not permitted unless prior approval is granted by the Village;

16. Dust of any type is to be controlled by use of water or other forms of containment so not to cause a nuisance;

17. Sump discharge is to have one or more of the following: open site connection, storm sewer connection, drywell or discharge to approved area on the property. (Sump water will not be allowed to discharge to a location that will cause a hazard in freezing conditions such as drives sidewalks or streets);

18. As built drawings are required for all exterior water, sanitary and storm service lines from the foundation wall of the structure being serviced to the point of connection with the existing service stub or existing main. The as built drawing is required regardless of the length of the installation of the new portion of the utility service.

18.1 The drawings must be to scale and be no smaller than 1” = 20’. The scale must be indicated on the submitted drawings.

18.2 The drawing must be neat, clean and legible. Multiple service lines can be shown on the same drawing.

18.3 The minimum acceptable drawing size is 8-1/2” x 11”.

18.4 The pipe size and type must be indicated for each service line.

18.5 The Location of the installed service line(s) must be tied to a minimum of two exterior property corners and two exterior foundation corners within an accuracy of 1 foot.

18.6 The locations of all fittings, cleanouts, and B-box’s must be identified within an accuracy of one-foot.

18.7 The depth of the utility service below final grade must be indicated at all grade and at a minimum of every 50 feet along the length of each installed service.

18.8 All prominent topographical features such as exterior build foundations lines, sidewalks, back of curb, edger of pavement and existing manholes must be indicated if these features are within 20 feet of any portion of the utility service line work covered by the building permit.

18.9 The means of connecting the new portion of the utility line to the existing main or stub must be identified (Coupling types, tees, wyes etc.)

18.10 The lower right hand corner of the submitted drawing must contain the following information: Street address where the work is being performed; the building permit number; the date of the sketch preparation; the name and address and telephone number of the general contractor and subcontractor."

R109.5 Add the following new Section R109.5:

"Section R109.5 Schedule of Inspections. It shall be the responsibility of the contractor to request and receive approval of the following work, or any construction work, before proceeding to the next phase of new construction. The following is a list of required inspections but may not be all inclusive and additional inspections may be required as set forth by the building official:

1. Site inspection before start of construction to verify site requirements in place and construction fencing installed;

2. Excavation and footing;

3. Foundation, footing tile and damp-proofing;
4. Interior plumbing;

5. Electrical;

6. Heating;

7. Steel and rough framing;

8. Insulation, Draft stopping, Fire stopping;

9. Sewer Systems.

10. Water Service.

11. Fire and Life Safety Systems.

12. Final Inspection on completion.

An original survey by a Registered Illinois Land Surveyor shall be submitted to the building official immediately after the installation of the foundation. The survey shall indicate all property lines, easements, and all building lines of record. The survey shall indicate the legal description of the premises, be drawn on paper not smaller than 14" x 18" to a scale of not less than 30 feet to the inch and shall describe to the nearest one tenth of a foot, the size, shape and location of each structure on the premises, as well as the distances of the structures from the front, side and rear lot lines.

When a permit is issued for the construction remodeling, repair or alteration of any building, the building official shall advise the contractor in writing of the site requirements and inspections required for the particular work involved. The contractor shall then be responsible to complete and maintain site requirements, request inspections and receive approval of each phase of construction. The contractors shall have a representative at the site during the inspections."

R109.6 Add new Section R109.6 Structural Tests and Special Inspections as follows:

"R109.6 Structural Tests and Special Inspections: Structural Tests and Special Inspections: The Building Official, in his or her sole discretion, may, in addition to those requirements for Structural Tests and Inspections set forth in Chapter 17 of the International Building Code, require certain additional structural tests and special inspections and information, including without limitation construction documents, plans, specifications, inspections and testing, for situations that are special or unique to a particular construction project including without limitation bluff and ravine projects, pools, beach projects, piers, trams, cellular towers, monopoles or similar communications equipment and facilities, and stairs on bluffs and ravines.

R112.1 Delete Section R112.1 and replace as follows:

"R112.1 Board of Appeals. The Village of Lake Bluff Architectural Board of Review shall serve as the Board of Appeals for this building code."

R113.1 Delete entire section without replacement.

R115 Add new section R115 as follows:

"Section R115
Work Hours and Site

"R115.1 Limitation on Exterior Construction Hours. There shall be no exterior construction work, material hauling, construction equipment start-up, or idling of construction equipment or construction vehicles on any property in the Village at the following times:

1. Monday through Friday before 7:00 a.m. and after 7:00 p.m.;

2. Saturdays before 8:00 a.m. and after 6:00 p.m.;

3. Sundays and nationally recognized holidays before 9:00 a.m. and after 5:00 p.m.; provided, however, that in no event shall heavy equipment, including, without limitation, earth moving machinery, dump trucks in excess of two and one-half tons, and other similar equipment and vehicles, be operated at any time on Sundays or nationally recognized holidays.

"R115.2 Limitation on Interior Construction Hours. There shall be no interior construction work of any kind on any property in the Village that produces noise that can be heard on any property other than the property on which such interior construction work takes place at the following times:

1. Monday through Friday before 7:00 a.m. and after 7:00 p.m.;

2. Saturdays before 8:00 a.m. and after 6:00 pm.;

3. Sundays and nationally recognized holidays before 9:00 a.m. and after 5:00 p.m.

R115.2.1 Exceptions.

1. The Village Administrator or the building official may waive any of the noise prohibitions in the event of an extraordinary circumstance.

2. The Village President, the building official, the Village Engineer, or the Village Police Chief or Fire Chief may waive any of the noise prohibitions and related time restrictions provided in this Section R115.2 in the event of an emergency. In the event of an emergency that creates an immediate danger or hazard to persons or property, any reasonable action may be taken to eliminate the immediate danger or hazard notwithstanding any restriction in this Section R115.2; provided, however, that such action shall be reported to any of the above-referenced Village officials within forty eight (48) hours after the action is taken.

Section R115.3 Removal of Debris. All waste materials shall be removed in a manner which prevents injury or damage to persons, adjoining properties and public rights of way. Adjoining streets and sidewalks shall be left broom clean at the end of each working day.

Section R115.4 Utility Connections. All service utility connections shall be discontinued and capped at the respective utility main in accordance with the rules and requirements of the authority having jurisdiction.

Table R301.2 Delete entire Table R301.2(1) and replace as follows:

| TABLE R301.2(1) | |
|---|---|
| CLIMATIC AND GEOGRAPHIC DESIGN CRITERIA | |
| Ground Snow Load | 40 psf minimum |
| Wind Speed | 3 second 90 normal 80 |
| Seismic Design Category | (0) but check design criteria for new Madrid Fault |
| Weathering | Severe |
| Frost line depth | 42 inches |
| Termite | Moderate to heavy |
| Decay | Slight to moderate |
| Winter Design Temperature | 0 degrees |
| Ice Shield Underlayment | Yes |
| Flood Hazard | See local flood zone map |
| Air Freezing Index | 2000 |
| Mean Annual Temperature | 50 degrees |

R310.2 At the end of the first paragraph of Section R310.2**,** ad the following sentence: “A guard rail at grade around window wells or a cover capable of supporting five hundred (500) pounds shall be provided.”

R313.1 Delete the exception

R313.2 Delete sections R313.2 and R313.2.1 and replace as follows:

"R313.2 One and two family dwellings automatic fire sprinkler systems.

**Notwithstanding anything contained in Sections R313.2 and R313.2.1 in the 2012 International Residential Code:**

R313.2.1 Fire Sprinkler Systems. All new single-family, single family attached with two or more units and two family or more dwellings constructed shall have a fire sprinkler system installed in compliance with the 2012 edition of the NFPA 13D, NFPA 13R, or NFPA 13 (as required) and the International Residential Code with the following local amendments:

1. Fire sprinkler suppression systems shall be installed throughout all areas in all new single family, single family attached with two or more units and two family or more residential dwelling units.

2. Fire sprinkler suppression systems shall be installed throughout all areas in all residential unit additions and existing structure where the total addition and/or project totals 75% of the finished product as measured by the calculations for the Floor Area Ratio outlined in Section 10-3-7 of the Lake Bluff Zoning Code. Square footage for an existing structure is to be calculated on areas where wall and ceilings are removed down to structural members.

3. A weather proof audio-visual device shall be installed on the exterior of the structure as part of the fire sprinkler suppression system so that the operation of the fire sprinkler suppression system will cause the audio-visual device to be sensed from the fronting street. A bell shall be installed in the interior of the structure, and shall be mounted, if possible, on the HVAC return air system, to reverberate the sound of a bell throughout the structure, to signal the activation of water flow to the sprinkler system.

4. Fire sprinkler suppression systems shall be installed in all attached garages and attached screen rooms, other attached rooms and multi season rooms of all aforementioned dwellings. Dry sidewall or pendant sprinklers could be used in all these attached garages, screen rooms and multi season rooms of these dwellings. Fire sprinkler suppression systems shall be installed in all new accessory structures over 1000 square feet as measured by the calculations for the Floor Area Ratio outlined in Section 10-3-7 of the Lake Bluff Zoning Regulations, subject to review by Village Building Department and Fire Department Staff.

5. Fire sprinkler suppression systems shall be installed in all new detached accessory structures with habitable rooms as defined in Section 10-1A-1 of the Lake Bluff Zoning Code with exceptions provided in this section.

6. Any and all multi-purpose piping systems (potable supply and water used for fire suppression) or networking systems as defined by the NFPA 13D shall be installed using Type L Copper. Stand alone sprinkler systems are permitted to use Chlorinated Polyvinyl Chloride (CPVC) per ASTM F 422 or other approved materials as listed in the 2002 edition of the NFPA 13D.

7. Prior to Village plan review, fire sprinkler suppression system plans shall be stamped and sealed by a National Institute for Certification in Engineering Technology (NICET) Level 3 Engineer or an equal qualification approved by NICET.

8. Fire sprinkler suppression system contractors shall be licensed by the State of Illinois.

R315.1.1 Add the following new section R315.1.1:

"R315.1.1 Definitions. The following words and terms shall, for the purposes of this chapter, Section R315, have the meanings shown herein.

CARBON MONOXIDE ALARM An electrical device which meets the requirements of UL Standard 2034 for detecting and warning individuals of the presence of carbon monoxide.

CARBON MONOXIDE MONITOR An electrical device for detecting and warning individuals of the presence of carbon monoxide. These devices do not meet UL Standard 2034 because they detect and alarm smaller quantities of carbon monoxide then UL 2034 allows.

R315.4 Add new section R315.4 as follows:

"R315.4 Where required: Carbon monoxide detectors shall be required as follows and as required in any other section of this code any other adopted code and as required by laws of the Sate of Illinois:

1. Carbon monoxide alarms where required by this code shall meet the current UL Standard 2034 or its equivalent. Carbon monoxide alarms shall be installed per the requirements of NFPA 720.

2. Carbon monoxide monitors where allowed by this code shall be installed and maintained per the manufacturer's recommendations.

1.

3. Carbon monoxide alarms . In any building with sleeping facilities that relies on combustion of fossil fuel for heat, ventilation, hot water, or fireplace within the building, and for buildings with attached garages, fossil fueled appliances, propane fuels, liquid type fuels and as required by laws of the State of Illinois. There shall be a detector locator in each sleeping room, within 15 feet of a sleeping room, every level of the building and possibly multiple detectors per level and in all mechanical rooms

Exceptions:

1. Existing buildings, with sleeping facilities, that are renovated or altered and the work would normally require a Village permit to accomplish, after adoption of this ordinance shall be required to install a carbon monoxide alarm per this ordinance.

2. Existing buildings with sleeping facilities that replace a furnace or hot water heater with a fossil fueled furnace or hot water heater or install a fireplace shall be required to install a carbon monoxide alarm per this ordinance."

R402.1 Delete section R402.1 and replace with the following:

**"**R402.1 Wood foundations. The use of wood foundations is not permitted."

R403.1 Add the following at the end of Section R403.1: “The minimum size footings shall be ten10 inches (10”) x twenty inches (20”) 20 inches. The use of wood footings is not allowed.”

R404.1 Add the following at the end of the Section R404.1**:** “The minimum thickness for a foundation wall is 10 inches and there shall be water shield installed between the footing and the foundation wall”.

R405.3 Add the following new Section R405.3**:**

"Section R405.3 Basements and crawlspaces. Basements and crawl spaces require drain tile, SDR 38, ASTM F840 (or approved equal) with approved couplings. Drain tile shall be bedded on two inches of washed stone, with a minimum 12 inches of one -half (½) inch to three -fourth (¾) inch washed stone cover.”

R502.14 Add the following new section R502.14:

"Section R502.14 Structural engineered wood products. A structural engineered wood product is defined as wood construction members other than that permitted in the International Building Code “Type 4” Timber construction. When structural engineered wood products are used in floor or ceiling assemblies, they shall not be left exposed. Fire protection shall be provided by one of the following methods:

1. A ceiling complying with the Interior Covering requirements of the International Residential Code but at least a two hour fire resistance rating;

2. A U.L. listed suspended ceiling assembly rated a minimum of two hour;

3. An automatic sprinkler system designed per the current N.F.P.A.#13, Sprinkler Standard, and approved by the Building Official or his designee, and installed by an approved sprinkler contractor permitted to work in the Village of Lake Bluff; or

4. Other methods of equivalent protection acceptable to the Building Official or his designee.

Additionally, the area between the ceiling and the floor above shall be subdivided into areas of not more than 1,000 square feet with 5/8" type “X" drywall or other means acceptable to the Building Commissioner or his designee when utilizing structurally engineered products.

R506.1.1 Add the following new section R506.1.1:

"Section R506.1.1 Floors. All garage floor slabs shall be a minimum of five inches with welded wire reinforcement mesh. All basement floor slabs and slabs on ground shall be a minimum of four inches with a six

mil vapor barrier and welded wire mesh and a minimum of one inch of solid insulation.

R803.1 Add the following at the end of Section R803.1**:**

"Section R803.1 Lumber Sheathing. “Roof sheathing supported on 16 inch rafter or beam spacing shall be a minimum of one-half (½) inch thick.”

R905.1.1 Add the following new Section R905.1.1**:**

"Section 905.1.1 Ice Barrier. Provide an ice barrier in all locations indicated in this building code for the first three feet of all eaves or two feet from the outside wall of the structure, which ever extends the protection the greatest distance up the roof. Provide ice dam protection in all valleys at least 18 inches to either side of the valley or intersection of the roof sheathing that comprises the valley.

N1101.2 Delete Section N1101.2 and replace with the following:

"N1101.2 Compliance. Compliance shall be demonstrated by meeting the minimal requirements of the 2012 International Energy Conservation Code as amended in Chapter 10 of this Title or meeting the requirements of this Chapter 3, whichever is more restrictive. Climate zones from figure N1101.2 or Table N1101.2 shall be used in determining the applicable requirements from this chapter. Compliance shall not be less than what is required by any State of Illinois Energy Conservation Code.

N1102.1.4 Add new section N1102.1.4 as follows:

"N1102.1.4 Climate Zone Lake Bluff. The minimum climate zone to be utilized for Lake Bluff Illinois is Climate Zone 5

M1305.1.3 Delete the last sentence and replace as follows:
The clear access opening dimensions shall be a minimum of 24 inches by 36 inches, and large enough to allow removal of the largest appliance.

**Part VII – Plumbing Administration**

Delete the text of this Part and replace with the following:
Refer to
Chapter 6 of this Title.

**Part VIII – Electrical**

Delete the text of this Part and replace with the following:
Refer to Chapter 7 of this Title.

**Chapter 44 – Referenced Standards:**

1. Delete “International Plumbing Code” and substitute and replace with “Illinois Plumbing Code 2004”. Law as defined in Section 2901.1 of the International Building Code as amended by this Title IV.”

2. Delete “International Electric Code” and substitute replace with “NFPA 70 2011 edition”. “National Electric Code 2011 Edition."

3. Delete “International Zoning Code” without substitution."

Appendix A Adopted by reference.
Appendix B Adopted by reference.
Appendix C Adopted by reference.
Appendix G Adopted by reference.
Appendix K Adopted by reference.
Appendix O Adopted by reference.

# CHAPTER 4
# 2009 INTERNATIONAL PROPERTY MAINTENANCE CODE

9-4-1 Adoption Of Property Maintenance Code:

There is hereby adopted by the Village the 2012 International Property Maintenance Code, as hereinafter amended (hereinafter the "Property Maintenance Code"). At least one copy of the 2012 International Property Maintenance Code has been on file in the office of the Village Clerk for a period of at least 30 days prior to the adoption of these provisions and remains on file in the office of the Village Clerk, and is hereby adopted and incorporated as fully as if set out at length herein.

9-4-2 Amendments to the International Property Maintenance Code:

The following sections of the 2012 International Property Maintenance Code are hereby amended, revised, and changed as follows:

101.1 Delete Section 101.1 and replace as follows:

"101.1 Title. These regulations shall be known as the International Property Maintenance Code of the Village of Lake Bluff hereinafter referred to as this "code."

102.3 Delete Section 102.3 and replace as follows:

"102.3 Application of other codes. Repairs, additions, or alterations to a structure, or change of occupancy, shall be done in accordance with the procedures and provisions of all applicable and adopted codes and ordinances of the Village of Lake Bluff and any applicable law of the State of Illinois. Nothing in this code shall be construed to cancel, modify or set aside any provision of Title 10 of the Lake Bluff Municipal Code (zoning regulations)."

103.1 Delete Section 103.1 and replace as follows:

"103.1 General. The building official shall be responsible for the enforcement of the Property Maintenance Code."

103.5 Delete Section 103.5 and replace as follows:

"103.5 Fees. The fees for activities and services performed by the department in carrying out its responsibilities under this code shall be as indicated in Section 1-12-3 of the Municipal Code.

104.7 Add new Section 104.7 as follows:

"104.7 Coordination of inspections. Whenever in the enforcement of this code or another code or ordinance, the responsibility of more than one code official of the jurisdiction is involved, it shall be the duty of the code officials involved to coordinate their inspections and administrative orders as fully as practicable so that the owners and occupants of the structure shall not be subjected to visits numerous inspectors or multiple or conflicting orders. Whenever an inspector from any agency or department observes an apparent or actual violation of some law, ordinance or code not within the inspector's authority to enforce, the inspector shall report the findings to the code official having jurisdiction.

106.4 Delete Section 106.4 and replace as follows:

"106.4 Violation Penalties. Any person or property owner who shall violate a provision of this code, or fail to comply therewith, or with any of the requirements thereof, shall be subject to the penalties set forth in Section 9-1-22 of this Title.

110.1 Delete Section 110.1 and replace as follows:

"110.1 General. The code official shall order the owner of any premises upon which is located any structure, which in the code official judgment after review is so deteriorated, or dilapidated or damaged or has become so out of repair as to be dangerous, unsafe, insanitary, or otherwise unfit for human habitation or occupancy, and such that it is unreasonable to repair the structure, to demolish and remove such structure; or if such structure is capable of being made safe by repairs, to repair and make safe and sanitary, or to board up and secure and hold for future repair or to demolish and remove the owner's option; or where there has been a cessation of normal construction of any structure for a period of more than 6 months, the code official shall order the owner to demolish and remove such structure or board it up for future repair. Boarding the building up for future repair shall not extend beyond 60 days, unless approved by the building official.

111.1 Delete Section 111 and replace as follows:

"Section 111.1 Application for Appeal. A person shall have the right to appeal a decision of the code official to the Village of Lake Bluff Architectural Board of Review. The applicant shall make written notice for the appeal and such appeal shall be based on a claim that the true intent of this code or the rules legally adopted thereunder have been incorrectly interpreted or the provisions of the code do not fully apply.

202 Amend Section 202 by adding the following definitions in the proper alphabetical order:

COMMERCIAL VEHICLE. Any vehicle operated for the transportation of persons or property in furtherance of any commercial or industrial enterprise, for-hire or not-for-hire, that is either in excess of 8,000 pounds in gross weight (including vehicle and maximum load) (class I commercial vehicle) or less than 8,000 pounds in gross weight (including vehicle and maximum load) and has property that is stored and or transported in a manner that is not safe or not completely enclosed within the vehicle or trailer and or may or may not have exterior commercial signage (class II commercial vehicle).

RECREATIONAL VEHICLE. Any vehicle or boat designed for living quarters, recreation, or human habitation and not used as a commercial vehicle specifically including but without limitation boats and other watercraft, camper trailers, motorized homes, off-the-road vehicles, racing cars and racing cycles, travel trailers, truck campers, snowmobiles, tent trailers and vehicle trailers.

RUBBISH. Combustible and noncombustible waste materials, except garbage; the term shall include accumulated non used items commonly referred to as “junk”, the residue from the burning of wood, coal, coke and other combustible materials, paper, rags, cartons, boxes, wood, excelsior, rubber, leather, tree branches, yard trimmings, tin cans, metals, mineral matter, glass, crockery and dust and other similar materials."

302.2 Delete Section 302.2 and replace as follows:

"302.2 Grading and drainage. All premises shall be graded and maintained to prevent the erosion of soil and to prevent the accumulation of stagnant water thereon, or within any structure located thereon and also to prevent the unnecessary runoff of stormwater to neighboring properties.

Exception: Approved retention areas and reservoirs

302.2.1 Add new Section 302.2.1 as follows:

"302.2.1 Obstructions across a watercourse. It shall be unlawful to block or impede the flow of water in any type of manmade or natural water course including but not limited to ravines, ditches and swales."

302.4 Delete Section 302.4 and replace as follows:

"302.4 Weeds. All premises and exterior property shall be maintained free from weeds, grass or plant growth in access of 8 inches in height. All noxious weeds shall be prohibited. Weeds shall be defined as all grasses, annual plants and vegetation, other than trees or shrubs provided; however, this term shall not include cultivated flowers and gardens as well as native restoration type plantings and grasses. At no time shall any leaves, weeds, cut grass, vegetation, plants and like materials be disposed of in or on any ravine, bluff, watercourse, or public property.

Upon failure of the owner or agent having charge of a property to cut and destroy weeds after service of a notice of violation, they shall be subject to prosecution in accordance with Section 106.3 and as prescribed by the authority having jurisdiction. Upon failure to comply with the notice of violation, any duly authorized employee of the jurisdiction or contractor hired by the jurisdiction shall be authorized to enter upon the property in violation and cut and destroy the weeds growing thereon, and costs of such removal shall be paid by the owner or agent responsible for the property. If said costs are not paid by the owner or agent then the Village of Lake Bluff shall charge any and all costs, including fines and legal fees, associated with the violation remediation against the real estate upon which the structure is located and shall be a lien upon such real estate.:

302.4.1 Add the following new Section:

"302.4.1 Obstructions. Any and all landscaping, trees, shrubs, bushes and vegetative matter and any other object or thing shall not obstruct or impede the use of or vision of any public way, street, alley, sidewalk or fire hydrant and firefighting equipment and fire sprinkler and standpipe connections. Clear access of at least four feet in all directions must be provided for fire hydrants, firefighting equipment, fire sprinkler and standpipe connections.

302.10 Add new Section 302.10 as follows:

"302.10 Outdoor storage and parking of vehicles. The outdoor parking or storage of a recreational vehicle, or an enclosed or open trailer, on private property in a residence district for more than five consecutive days, or for more than five days within any 30-day period, unless the vehicle is parked in the rear or side yard of the lot and does not substantially impair the supply of light or air to adjacent properties.

Outdoor parking or storage of a recreational vehicle on public property in a residence district between the hours of 9:00p.m. and 6:00a.m. shall be prohibited.

The outdoor parking or storage of a Class I or a Class II Commercial Vehicle and any business related trailers (open or closed) shall be prohibited on public and private property in a residence district between the hours of 9:00p.m. and 6:00a.m.

302.11 Add new Section 302.11 as follows:

"302.11 Outdoor storage units in residential districts. Outdoor portable storage containers and units that may be used for personal storage are limited in time they can remain on site to 2 months or 60 calendar days. User must notify the Village of the date that it will be brought in and the location of the container or unit must be approved by the building official.

303.2 Delete Section 303.2 and replace as follows:

"303.2 Enclosures. Private swimming pools, hot tubs and spas, capable of containing water 24 inches or more in depth shall be completely surrounded by a fence or barrier at least 48 inches in height above the finished ground level measured on the side of the barrier away from the pool. Gates and doors in such barriers shall be self closing and self latching. Where the self latching device is less than 54 inches above the

bottom of the gate, the release mechanism shall be located on the pool side of the gate. Self closing and self latching gates shall be maintained such that the gate will positively close and latch when released from an open position of six inches from the gatepost. No existing pool enclosure shall be removed, replaced or changed in a manner that reduces its effectiveness as a safety barrier.

Exception: Aboveground spas or hot tubs with a locking safety cover that complies with ASTM F 1346 shall be exempt from the provisions of this Section 303.2.

304.1.1 At the end of Section 304.1.1 add the following: "14. Any condition deemed unsafe, hazardous, unsanitary or a fire hazard by the code official.

304.14 Delete Section 304.14 and replace as follows:

"304.14 Insect screens. During the period from April 15 to October 15, every door, window and other outside opening required for ventilation habitable rooms, food preparation areas, food service areas or any areas where product to be included or utilized in food for human consumption are processed, manufactured, packaged or stored shall be supplied with approved tightly fitting screens not less than 16 mesh per inch and every screen door used for insect control shall have a self closing device in good working condition.

306.1 Delete Section 306.1 and replace as follows:

"306.1 General. Every exterior and interior flight of stairs having four or more risers shall have a handrail on one side of the stairs and every open portion of the stair, landing, balcony, porch, deck, ramp or other walking surface which is more than 30 inches above the floor or grade below shall have guards. Handrails shall not be less than 30 inches high or more than 42 inches high measured vertically above the nosing of the tread or above the finished floor of the landing or walking surfaces. Guards shall not be less than 30 inches high above the floor of the landing, balcony, porch, deck, ramp or other walking surface.

308.3.1 Delete Section 308.3.1 and replace as follows:

"308.3.1 Garbage facilities. The owner of every dwelling shall supply one of the following: an approved mechanical food waste grinder in each dwelling unit; or an approved leak proof, covered, outside garbage container consistent with the Village's refuse regulations.

501.1 Delete Section 501.1 and replace as follows:

"Section 501.1 Scope. The provisions of this chapter shall govern the minimum plumbing systems, facilities and plumbing fixtures to be provided. If there should be a conflict between any listed requirements and those as required by the 2004 Illinois State Plumbing Code, as adopted by the Village and amended pursuant to Chapter 5 of this Title, then the most restrictive requirement would apply.

502.5 Delete Section 502.5 and replace as follows:

"Section 502.5 Public toilet facilities. Public toilet facilities shall be maintained in a safe sanitary and working condition in accordance with

the 2004 State of Illinois Plumbing Code, as adopted by the Village and amended pursuant to Chapter 5 of this Title. Except for periodic maintenance or cleaning, public access and use shall be provided to the toilet facilities at all times during the occupancy of the premises.

505.1 Delete Section 505.1 and replace as follows:

"Section 505.1 General. Every sink, lavatory, bathtub or shower, drinking fountain, water closet or other plumbing fixture shall be properly connected to either a public water system or to an approved private water system. All kitchen sinks, lavatories, laundry facilities, bathtubs, and showers shall be supplied with hot or tempered and cold running water in accordance with the 2004 State of Illinois Plumbing Code, as adopted by the Village and amended pursuant to Chapter 6 of this Title.

602.2 Delete Section 602.2 , including the Exception, and replace as follows:

"602.2 Residential Occupancies. Dwellings shall be provided with heating facilities capable of maintaining a room temperature of $68^0$ F in all habitable rooms, bathrooms and toilet rooms based on the winter outdoor design temperature for the locality indicated in Table 301.2(1) of the International Residential Code. Cooking appliances and temporary type heating devices shall not be used to provide space heating to meet the requirements of this section.

602.3 Delete Section 602.3 and replace as follows:

"602.3 Heat Supply. Every owner and operator of any building who rents, leases or lets one or more dwelling units or sleeping units on terms, either expressed or implied, to furnish heat to the occupants thereof shall supply heat during the period from October 15 to May 1 to maintain a temperature of not less than $68^0$ F in all habitable rooms, bathrooms and toilet rooms.

602.4 Delete Section 602.4 except for the Exceptions, which shall remain, and replace as follows:

"602.4 Occupiable work spaces. Indoor occupiable work spaces shall be supplied with heat during the period from October 15 to May 1 to maintain a temperature of not less than $65^0$F during the period the spaces are occupied.

604.3.1.1 Amend Section 604.3.1.1 and replace as follows:

"604.3.1.1 Electrical equipment. Add the following sentence at the end of the paragraph. All work shall also be in compliance with the 2008 National Electrical Code (NFPA 70), as adopted by the Village and amended pursuant to Chapter 7 of this Title.

604.3.2.1 Amend Section 604.3.2.1 and replace as follows:

"604.3.2.1 Electrical equipment. Add the following sentence at the end of the section before the exception: All work shall also be in compliance with the 2008 National Electrical Code (NFPA 70) , as adopted by the Village and amended pursuant to Chapter 7 of this Title.

606.1 Delete Section 606.1 and replace as follows:

"606.1 General. Elevators, dumbwaiters and escalators shall be maintained in compliance with ASME A17.1 and the State of Illinois Conveyance and Elevator rules and regulations. The most current certificate of inspection shall be on display at all times within the elevator or attached to the escalator or dumbwaiter, be available for public inspection in the office of the building operator or be posted in a publicly conspicuous location approved by the code official. The inspection and tests shall be performed at not less than the periodic intervals listed in ASME A17.1, Appendix N, State of Illinois Conveyance and Elevator rules an regulations and except where otherwise specified by the authority having jurisdiction.

704.5 Add Section 704.5 and replace as follows:

"704.2 Smoke alarms. Single or multiple-station smoke alarms shall be installed and maintained in groups R-2, R-3, R-4 and in dwellings not regulated in Group R occupancies, regardless of occupant load at all of the following locations:

1. On the ceiling or wall outside of each separate sleeping area within 15 feet of bedrooms;

2. In each room used for sleeping purposes; and

3. In each story within a dwelling unit, including basements and cellars but not including crawlspaces and uninhabitable attics.

Single or multiple station smoke alarms shall be installed in other use groups in accordance with the International Fire Code and also any laws of the State of Illinois.

704.6 Add new Section 704.6 as follows:

"704.6 Carbon monoxide detectors. Single or multiple-station carbon monoxide detectors shall be installed and maintained in groups R-1, R-2, R-3 and R-4 and in dwellings not regulated in Group R occupancies, regardless of occupant load at all of the following locations:

1. On the ceiling or wall outside of each separate sleeping area within 15 feet of bedrooms;

2. In each room used for sleeping purposes, and

3. In each story within a dwelling unit, including basements and cellars, but not including crawlspaces and uninhabitable attics.

Exceptions: As allowed by the State of Illinois Carbon Monoxide Act.

Appendix A Adopted by reference.

# CHAPTER 5
# 2012 INTERNATIONAL FIRE CODE

9-5-1 Adoption Of 2012 International Fire Code:

The regulations of the 2012 edition of the International Fire Code, as published by the International Code Council ("International Fire Code") is hereby adopted as the regulations governing the safeguard of life and property from the hazards of fire and explosion arising from the storage, handling and use of hazardous substances, materials and devices; and from conditions hazardous to life or property in the use or occupancy of existing or proposed new buildings or premises in the Village of Lake Bluff with such amendments as are hereafter set forth.

9-5-2 International Fire Maintenance Code on File: Complete printed copies of the International Fire Code, herein adopted, are available for public use and inspection at the office of the Village Clerk.

9-5-3 Amendments to the International Fire Code:

The following sections of the 2012 International Fire Code are hereby amended, revised, and changed as follows:

101.1 Delete section and replace as follows:

"101.1 Title. These regulations shall be known as the Fire Code of the Village of Lake Bluff, hereafter referred to as “this Code”.

102.7 Delete section and replace as follows:

"102.7 Referenced Codes and Standards. The codes and standards referenced in this Code, listed in Chapter 47 and Appendixes B, D, E, F, I and J as well as all of the most current NFPA Standards are hereby incorporated into the Village of Lake Bluff Building Code and shall be considered part of the requirements of this Code to the prescribed extent of each such reference. Where differences occur between the provisions of this Code and referenced standards, the more restrictive standard shall apply. The most current edition of the National Fire Protection Association (NFPA) Standards, except NFPA 1 and NFPA 5000, are hereby adopted outright and in whole and if differences occur between this code and the standards then the most restrictive shall apply.

104.8 Delete section and replace as follows:

"104.8 Modifications. The code official of the Village may grant a variance regarding any of the provisions of this Code upon application in writing by the owner or lessee of the building or structure, or their duly authorized agent, where there are practical difficulties in the way of carrying out the strict letter of this Code, provided that the spirit of the Ordinance codified in this chapter shall be observed, public safety secured, and substantial justice done. If the fire code official decides to grant a variance, he may place conditions thereon. The decision of the fire code official in either granting or denying the variance shall be in writing and entered in the

records of the Village of Lake Bluff. A signed copy of the fire code official's decision shall be furnished to the applicant.

104.10.2 Add new section as follows:

"104.10.2 Reporting hazardous locations. Any person discovering the evidence of spontaneous heating or other abnormal heating of any kind in any building, marine vessel, appliance, apparatus, tank, or open stack or pile, or any person upon discovering or being apprised of an uncontrolled hazardous gas leak or hazardous material or flammable and/or combustible liquid spill, shall immediately notify the Village.

105.6 Amend section 105.6 as follows:

"105.6 Required Operational Permits. Permits shall be obtained from the Village as required in other sections of this Code and as setforth in Sections 105.6.1 through 105.6.46. Permits shall be valid only for the calendar year they were issued for, or until the expiration date on the permit for temporary permits. A new permit along with the fee set forth in Section 1-12-3 of the Municipal Code shall be required each calendar year. Issued permits shall be kept on the premises designated therein at all times and shall be readily available for inspection by the Code Official.

105.8 Add new section as follows:

"105.8 Operational Permit Fees. The fees as established by Section 1-12-3 of the Municipal Code for any operational permits required by this Code, and shall be submitted along with the permit application for the following activities:

Air-supported structures, temporary
Aerosol products, flammable and combustible
Amusement buildings or events (outdoors) per event
Automotive service station and repair garages
Aviation facilities
Battery Systems
Bowling establishment
Calcium carbide storage
Carnivals and fairs
Cellulose nitrate film
Combustible dust-producing operations
Combustible fibers, except agricultural storage
Compressed gases
Corrosives
Covered mall buildings
Cutting and welding, calcium carbide and acetylene generators
Cryogenic liquids
Day care centers
Dry Cleaning Plants
Dust producing materials, explosion hazards
Education use groups (not for profit)

Education use groups (for profit)
Exhibits and trade shows
Explosives, ammunition and blasting agents
Fire hydrants and valves (private)
Fireworks (pyrotechnic display – per job)
Flammable and combustible liquids
Flammable solids
Floor finishing
Fruit and crop ripening
Fumigation and thermal insecticidal fogging (per event)
Licensed group homes
Lumber and woodworking plants with more than 100,000 board ft.
Hazardous materials, storage and handling
Hazardous production material facilities
Health hazard materials, storage and handling
High piled storage
Hot work operations
Industrial ovens
LP-gas, storage, use and handling
Liquefied/gas fueled vehicles or equipment in assembly buildings
Lumber yard and woodworking plants with more than 100,000 board ft.
Magnesium
Marine service and repair garages
Matches, manufacture or storage of
Material storage facilities
Miscellaneous combustible storage
Oil and gas production
Open flames and candles – torches for removing paint, candles, etc.
Open burning (Except recreational fires)
Organic coatings, process
Ovens and furnaces, industrial type processes
Oxidizers, liquid and solid
Pesticides, storage and handling
Places of assembly and education for profit
Places of assembly and education not for profit
Pyroxylin plastics
Radioactive materials
Recreational and sport vehicle service and repair
Refrigeration Equipment
Rooftop Heliport
Storage of scrap tires and tire by-products
Temporary membrane structures, tents and canopies
Toxic solids and liquids
Unstable (reactive) chemicals, storage and handling
Waste handling
Water material handling facilities
Water-reactive materials, storage and handling
Welding and cutting operations, electric or gas
Wood Products

106.4.1 Add new section as follows:

"Section 106.4.1 Plan review and site inspection fee schedule. Each applicant shall pay those plan review and site inspection fees for review and site inspection by the Village set forth in Section 1-12-3 of the Municipal Code. No part of said fees shall be refundable. Plan review fees shall include re-reviews, along with preliminary site visits up to a total of three (3) inspections for the each category. Contact the Village of Lake Bluff for the plan review and site inspection fee schedule. Submit four (4) sets of fire sprinkler shop drawings and construction documents for plan review.

**NOTE:** In addition to the review fees listed, the applicant shall pay, prior to the issuance of any permit, the actual costs and expenses incurred by Village of Lake Bluff for extraordinary reviews of plans or specifications beyond the review customarily involved in the usual course of such plan reviews. Such costs and expenses shall include actual review fees by consultants or outside contractors or time spent by Village of Lake Bluff staff. Village of Lake Bluff staff time shall be billed at an hourly rate to be determined by the Code Official or designee.

111.1 Delete section and replace as follows:

"111.4 Failure to comply. Any person who shall continue any work after having been served with a stop work order, except such work as that person is directed to perform to remove a violation or unsafe condition, shall be subject to those penalties set forth in Section 9-1-22 of this Title.

301.3 Add new section as follows:

"301.3 Items not specifically covered. Whenever or wherever a condition is found in any building, lot, or premises, that in the opinion of the Fire Official is not specifically covered by the provisions of this Title, but that requires correction or removal for the protection of the occupants or the public, the Fire Official shall order such conditions be corrected or removed and the owner or occupant of such buildings, lots, or premises shall comply with such orders."

305.1 Add new section as follows:

"305.1.1 Fuel burning appliances located in garages. Any fuel burning appliance located in a garage area of any occupancy mounted less than six feet above the floor shall be enclosed with a one-hour fire rated enclosure with makeup air taken from the exterior, not the garage area.

Exception: Any fuel burning appliance that is American Gas Association certified, with a safe, sealed combustion chamber (no open flame) designed with an intermittent ignition device and make-up air taken from the exterior not the garage."

305.5 Add new section as follows:

"305.5 Portable Heaters. Portable heaters shall be designed and located so that they cannot be easily overturned, and heaters shall be designed to shut off if overturned. The Code Official may prohibit the use of portable heaters in occupancies or situations in which such use or operation would present an undue danger to the life or property of others.

305.6 Add new section as follows:

"305.6 Heating and lighting apparatus. Proper clearance (a minimum of 36 inches) shall be maintained between lighting and heat producing equipment and combustibles so that continuous operation at full capacity will not increase the temperature of the surrounding combustibles to their flash point or ignition temperature.

307.6 Add new section as follows:

"307.6 Spread of fire. No person shall knowingly permit any fire to spread so as to endanger the life or property of another or use or operate any device which may be a source of ignition, unless proper removal of flammable material surrounding the operation is accomplished, or such other reasonable precautions are taken to ensure against the starting or spreading of unfriendly fires."

307.4.3 Amend Section 307.4.3 as follows:

Delete the exception.

307.4.3.1 Add new section as follows:

"307.4.3.1 Portable outdoor fireplaces. Portable outdoor fireplaces shall be used at least 19 feet from a structure and only on noncombustible surfaces. Fuel for an outdoor fireplace shall consist of only seasoned, dry firewood and shall be ignited with a small quantity of paper. The outdoor fireplace shall not be used for disposal of cut branches, vegetation, landscape waste, debris, garbage, or refuse of any kind."

315.3 Amend section by adding the following language to the end of the section: "and within 25 feet of any structure."

503.1.4 Add new section as follows:

"503.1.4 Approval. The requirement for and location of the fire apparatus roads or fire lanes shall be reviewed and approved by the Village."

503.2.1 Delete section and replace as follows:

"503.2.1 Dimensions. Fire apparatus access roads shall have an unobstructed width of not less than 20 feet, exclusive of shoulders, except for approved security gates in accordance with Section 503.6, and an unobstructed vertical clearance of not less than 15 feet.

503.2.3 Delete section and replace as follows:

"503.2.3 Surfaces. Fire apparatus access roads or fire lanes shall have an approved, by the fire code official, surface capable of supporting the weights of appropriate fire apparatus. Fire apparatus roads shall be pitched in such a manner as to allow the runoff of water and eliminate the potential of standing water. It shall be the responsibility of the property owner to maintain the surface in a usable condition at all times, including the removal of snow."

503.7 Add section as follows:

"Section 503.7. Adopt IFC Appendix D – Fire Apparatus Access Roads

506 Delete section and replace as follows:

"Section 506
Key Boxes

"506.1 When required. When access to, or within a structure, or an area unduly difficulty because of secured openings, or to gain access to fire protection controls, and where immediate access is necessary for life saving or fire fighting purposes, the Building Official shall require a minimum of one key lock box to be installed at a height not to exceed six (6) feet, in an accessible and approved location. All buildings with automatic fire alarm systems and/or automatic fire suppression sprinkler systems shall have installed an approved key lock box for access by the Village. The key lock box shall be of an approved type and shall contain keys to gain access as required by the Building Official.

506.2 Key lock box maintenance. The operator of the building shall immediately notify the Building Official and provide the new key when a lock is changed or re-keyed. The key to such lock shall be secured in the key lock box. The users shall be responsible for the proper installation and maintenance of such key lock boxes, at their expense, and shall agree to indemnify and hold harmless the Village, and their officers, employees and agents from any liability with respect to such key lock boxes.

507.1.1 Delete section and replace as follows:

"507.1.1 General. All water distribution facilities including piping, fittings, hydrants, valves, devices, well pumps, and other needful appurtenances shall be subject to approval of the Village and the Fire Code Official and shall be installed according to the standards herein adopted. A water supply system shall be capable of supplying the hydrants prior to the construction of structures. It shall be unlawful to erect, alter, use or occupy any structure that has been deemed to have inadequate water supply.

507.3.1 Add section as follows:

"507.3.2. Adopt Appendix B – Fire Flow for Buildings

507.5.1 Delete section and replace as follows:

"507.5.1 Where required. The maximum hydrant spacing shall not exceed 350 feet from the furthest point of any building or structure as measured by an approved access route around the exterior of the facility or building unless otherwise approved by the Fire Code Official. Where the configuration of lots, distances between buildings and lot lines or public utility easements, accessibility to buildings for fire suppression requirements dictate, the Fire Code Official shall increase or decrease hydrant spacing and appropriate supply mains as deemed necessary.

507.5.1.1 Add new section as follows:

"507.5.1.1. Adopt IFC Appendix C – Fire Hydrant Locations and Distribution

507.5.1.2 Add new section as follows:

"507.5.1.2 General. Additional fire hydrants shall be located within 50 feet of any Fire Department Connection (FDC).

507.5.7 Add new section as follows:

"507.5.7 Identification. All fire hydrants public or private shall be identified with a number as issued by the Village, an approved pavement marker delineating the fire hydrant location and caps painted a color approved by the fire code official. This color shall correspond to the gallons per minute of water flow available from that hydrant.

507.5.8 Add new section as follows:

"507.5.8 Unauthorized use. It shall be unlawful for any person to utilize any firefighting device such as a fire hydrant, drafting hydrant, dry hydrant, or other water supply appurtenances designed for fire suppression operations without the express permission of the Building Official.

609.4 Add new section as follows:

"609.4 Required kitchen hood fire suppression systems. All required commercial or other occupancy kitchen exhaust hood and duct system shall be protected with an approved wet chemical fire suppression system installed and maintained per NFPA 17, and UL 300 Standard. Every required automatic fire suppression system, when activated shall transmit a fire alarm signal to the Village of Lake Bluff main dispatch center or a U.L. listed and approved central monitoring station via an approved fire alarm system.

609.5 Add new section as follows:

"609.5 Maintenance. Commercial kitchen exhaust systems shall be cleaned to remove deposits of residue and grease in the system at intervals specified in the cleaning schedule required to be submitted in accordance with the mechanical code listed in Chapter 47. Thorough cleaning of ducts, hoods and fans shall require scraping, brushing or other positive cleaning methods.

609.6 Add new section as follows:

"609.6 Cleaning Schedule. Where a cleaning schedule is not on file, the Code Official shall require a schedule to be submitted, indicating the method of cleaning and the time intervals between cleanings.

903.2 Delete section and replace as follows:

"903.2. Automatic fire suppression system required. Notwithstanding anything contained in this International Fire Code to the contrary, Automatic fire suppression systems shall be required as provided in Section 903.2.1 of Section 9-2-3 and Section R313.2 of Section 9-3-3 of this Title.

903.3.1.4 Add new section as follows:

"903.3.1.4 Warehouse and Storage Buildings. Unknown specification use and occupancy for new warehouse buildings (Use groups S or F) with a ceiling roof height of 25 feet or greater to be protected with ESFR (Early Suppression Fast Response) fire sprinkler system or a hydraulically calculated system for class IV commodities with rack storage calculated to the greatest storage height. All sprinkler systems shall be electronically supervised by a fire alarm system.

903.3.8 Add new section as follows:

"903.3.8 Sprinkler valve/fire pump room. All new or renovated buildings shall enclose the fire sprinkler valve rooms and fire pump rooms with a minimum of an approved one hour rated fire separation enclosure.

903.4.2.1 Add new section as follows:

"Section 903.4.2.1 Strobe Lights. A strobe light shall be installed on the exterior of all occupancies protected by a fire sprinkler system. The strobe light shall be located directly over the Fire Department Connection and next to the 10-inch exterior bell or in a location approved by the fire code official. In a new multi-occupancy structure or the same type structure that is renovated or remodeled, an additional strobe light shall be installed at an approved exterior location for each unit. These devices shall activate on a water flow only. The strobe light shall be clearly visible from the Fire Department's normal access route and shall be labeled as "water flow". The type, number of appliances and location of the strobe lights and bells shall be approved by the building official."

903.4.2.1.1 Add new section as follows:

"903.4.2.1.1 Alarm Notification Appliance for all new NFPA 13D fire sprinkler systems for one and two family dwellings. A weather proof audio visual device shall be installed on the exterior of the structure as part of the fire suppression system so that the operation of the fire sprinkler suppression system will cause the audio visual device to be sensed from the fronting street. A minimum of a 6 inch bell shall be installed in the interior of the structure, and shall be mounted, if possible on the HVAC return air system, to reverberate the sound of the bell to signal that there is an activation of water flow to the sprinkler system.

903.4.2.2 Add new section as follows:

"903.4.2.2 Building Notification. Alarm indicating appliances audio visual devices shall be provided, seen and heard in all areas of every building per NFPA 72. All sprinklered buildings shall be provided with occupant notification devices. This will provide full building notification per NFPA 72."

903.4.2.3 Add new section as follows:

"903.4.2.3 Inspector’s Test Valve accessibility and Identification. Fire sprinkler system inspectors test valves shall be accessible at all times and located no more than 6 feet above the finished floor unless approved otherwise by the fire code official. On multiple riser systems, test valves shall be marked as to which riser and area it tests.

903.4.3 Delete section and replace as follows:

"903.4.3 Floor control valves. In multi story buildings, approved supervised indicating floor control valves with water flow switches shall be provided for each floor at the point of connection to the riser. In large multi tenant buildings, approved control valves with water flow switches shall be provided for each tenant. This will make it easier for the fire department personnel to locate the fire and will eliminate birdcage sprinkler systems where the alarm is for the whole building."

903.4.3.1 Add new section as follows:

"903.4.3.1 Sprinkler control valves. All new and existing sprinkler control valves shall be equipped with electronic supervision (tamper switches) in accordance with NFPA 72. All new tamper switches installed shall have the capability to self restore. All supervisory signals shall be transmitted directly to the Village of Lake Bluff Fire Communication Center or an approved and U. L. listed central monitoring station.

903.7 Add new section as follows:

"Section 903.7 Hydraulic Nameplate. By each hydraulically calculated area, on each drawing, provide a copy of the hydraulic nameplate. This will make it easier to check the hydraulics of the sprinkler system for future building or storage changes.

903.8 Add new section as follows:

"Section 903.8 Fire pump test header. Provide an outside test header on all fire pump installations. An OS&Y control valve shall be provided on all fire pump test headers.

903.9 Add new section as follows:

"903.9 Hydraulic calculations. Provide a minimum 5 psi minimum safety factor in the fire protection system hydraulic calculation. The system demand shall be 5 psi minimum below the seasonal low water flow test supply. The safety factor will allow for low pressures in the water supply. By each hydraulic calculated area, on each drawing, provide a copy of the hydraulic nameplate. This will make it easier to check the hydraulics of the sprinkler system for future building or storage changes."

903.10 Add new section as follows:

"903.10 Fire hose valves – Warehouse and/or storage Fire Areas. In all warehouse storage areas exceeding 10,000 square feet, or where storage exceeds 12 feet high, provide inside 2 ½" fire hose valves with 1 ½" reducer to a 1 ½" connection. Locate the valves at each door entrance to and exit from the warehouse and/or storage area. Provide additional 2 ½" fire hose valves so that no portion of the warehouse and/or storage area is more than 120' maximum travel distance to a fire hose valve. Show the location of all obstructions and/or racks on the drawing.

Fire hose valves system piping shall be:

1. A separate riser piping system or a system as approved by the fire code official;

2. The 2 ½" valves shall be supplied by a minimum of 4" with 2 ½" drops to each valve or as approved by the fire code official; and

3. Where system pressures exceed 100 psi, provide Potter reduced pressure field adjustable type valves.

903.11 Add new section as follows:

"903.11 Large warehouse system check valves. Provide a check valve in each sprinkler riser on large warehouse systems. This will prevent multiple sprinkler system riser flow switches from activating (backwards) when large volumes of water are flowing through another riser.

905.3.1 Add new section as follows:

"905.3.1 Additional installation requirements. All required standpipe systems shall be supplied by a separate riser unless otherwise approved by the fire code official. The supply riser shall be hydraulically designed to supply 2 ½" hose drops. The riser system shall be equipped with a separate control valve and flow switch. The standpipe shall be a 2 ½"

gated connection with a 1 ½" reducer and all locations shall be approved by the Code Official. All standpipe and sprinkler risers shall have separate control valves and flow switches per floor.

905.3.1 Delete section except for exceptions, which shall remain, and replace as follows:

"905.3.1 Building height. Class III standpipe systems shall be installed throughout buildings or structures (1) in all newly constructed buildings so that all areas in excess of 100 feet from the nearest point of entry to the building shall be covered by a standpipe; (2) in all areas of existing structures which have been remodeled or added to in such a manner that those areas are located in excess of 100 feet from the nearest point of entry to the building; (3) in all newly constructed buildings or structures more than one story in height or more than one story below the highest level of fire department vehicle access so that all areas on those floors are within 100 feet of a standpipe; and (4) in all buildings or structures more than one story in height or one story or more below the highest level of fire department vehicle access which have been remodeled or added to in such a manner so that those areas are located in excess of 100 feet from the nearest standpipe. The standpipes shall be provided with a 2½" to 1½" reducer and cap with no fire hose. There shall be an approved fire department connection at grade and hose connections located at each floor level.

905.12 Add new section as follows:

"905.12 Piping design. The riser piping, supply piping and the water service piping shall be sized to maintain a residual pressure of at least 65 psi (448kPa) at the topmost outlet of each riser. The piping size shall be based on the capacity of the automatic water supply system or, where as automatic water supply is neither required nor provided to maintain the residual pressure of 65 psi, the pipe size shall be on a pressure of 150 psi available at the fire department connection.

Exception: The residual pressure of 65 psi is not required in buildings equipped throughout with an automatic sprinkler system in accordance with Section 903.3 and where the highest floor level is not more than 150 feet above the lowest level of fire department vehicle access.

Exception: One – and two – family dwellings."

905.13 Add new section as follows:

"Section 905.13 Riser sizing. The riser size shall be based on the hydraulic calculations for a minimum flow of 500 gallons per (gpm) (378 L/min.).

Exceptions:

1. Where only 1 ½" valves are provided, the riser(s) shall be sized to provide a minimum flow of 100 gpm (378 L/min);

2. In buildings where limited area sprinkler systems are supplied with water from a common standpipe riser, the riser shall be sized to satisfy total demand;

3. For occupancies Use Group B, I, R1, or R2 in buildings that are equipped throughout with an automatic sprinkler system in accordance with Section 903.3, each riser shall be sized for a minimum flow of 250 gpm (945 L/min.); and

4. Risers that are sized in accordance with the pipe schedule requirements of NFPA 14 listed in Chapter 35 are not subject to this requirement.

905.14 Add new section as follows:

"Section 905.14 System pipe sizing. The system piping, including the horizontal or common feeder lines, shall be sized for a minimum flow of 500 gpm (1892 L/min.). Where more than one standpipe riser is required or provided, all common system piping shall be sized for a minimum flow of 500 gpm (1892 L/min.) for the first riser plus 250 gpm (945 L/min.) for each additional riser, and the total shall not be required to exceed 1,250 gpm (4731 L/min.).

Exceptions:

1. Where only 1 ½" valves are provided, the supply piping shall be sized for a minimum flow of 100 gpm (378 L/min.) for each riser, and the total shall not be required to exceed 500 gpm (1892 L/min.).

2. In buildings where limited area sprinkler systems are supplied with water from a common standpipe riser, the supply piping shall be sized for a minimum flow of 500 gpm (1892 L/min.) plus the sprinkler demand for first riser, plus 250 gpm (945 L/min.) for each additional riser, and the total shall be required to exceed 1,250 gpm (4731 L/min.).

3. For occupancies in Use Group B, I, R-1, or R2 in buildings that are equipped throughout with an automatic sprinkler system in accordance with Section 903.3, all common supply piping shall be sized for a minimum flow of 250 gpm (945 L/min.) for the first riser plus 250 gpm (945L/min.) for each additional riser, and the total shall not be required to exceed 750 gpm (2838 L/min.).

906.1 Delete exception to paragraph 1 and add the following at the end of the section:

"7. Where deemed necessary by the fire code official based on plan reviewing, inspections of occupancies, or protection of processes and/or activities and at a minimum at each exit door and within a seventy five (75) travel distance from anywhere in the space.

8. Fire extinguishers shall be a minimum 10 pound (4A:40-B: C) ABC Dry Chemical type unless approved otherwise by the fire code official. All fire extinguishers shall have location signs and current services tags."

907.1.4 Add new section as follows:

"Section 907.1.4 Equipment-Fire Alarm Control Panels. New fire alarm control panels shall be addressable unless otherwise approved by the Code Official. The equipment shall be capable of having the audio signal silence without resetting the fire alarm control panel. All fire alarm control panels shall have an approved method of placing the system in trouble mode at the location of the alarm panel.

907.2 Delete section and replace as follows:

"907.2 Where required-new buildings and structures. An approved manual, automatic, or manual and automatic fire alarm system shall be provided in all Use Groups of new buildings and structures in accordance with the Building and Fire Codes. Fire alarm systems shall be maintained in full operating condition at all times. All fire alarm control panels or full function annunciator panels shall be installed within 10 feet of the main entrance, or in a location approved by the fire code official. Occupant notification shall be in accordance with section 907.6, unless other requirements are provided by another section of this code. Where automatic sprinkler protection is installed in accordance with Building and Fire Codes is provided and connected to the building fire alarm system, automatic heat detection required by this section shall not be required. An approved automatic fire detection system shall be installed in all Use Groups, not provided with an automatic sprinkler system, in accordance with the provisions of this code and NFPA 72. Devices, combinations of devices, appliances and equipment shall comply with this Chapter.

The automatic fire detectors shall be smoke detectors, except that an approved alternative type of detector shall be installed in spaces such as boiler rooms where, during normal operation, products of combustion are present in sufficient quantity to actuate a smoke detector.

Notwithstanding anything contained in the International Building or Fire Code to the contrary, all newly constructed buildings, remodeling/renovations, change of occupant, change of ownership or additions thereto shall have installed and maintained therein an approved automatic fire alarm system. Except as otherwise specifically prescribed, complete approved automatic fire alarm systems shall also be installed wherever specified by this code.

Exception: One and two family residences, unless specified elsewhere in this Code."

907.2.1 Delete section and replace as follows:

"907.2.1 Group A. A manual fire alarm shall be installed in accordance with NFPA 72 in Group A occupancies.

907.2.1.1 Delete section and replace as follows:

"907.2.1.1 Group A-2. An automatic fire alarm detection system shall be installed in accordance with NFPA 72 in Group A-2 occupancies ."

907.2.2 Delete section and replace as follows:

"Section 907.2.2 Group B. A manual fire alarm system shall be installed in all Group B occupancies."

907.2.3 Delete section and replace as follows:

"907.2.3 Group E. A manual fire alarm system shall be installed in all Group E occupancies. When automatic sprinkler systems or smoke detectors are also installed, such systems shall be connected to the building fire alarm system.

907.2.4 Delete section and replace as follows:

"907.2.4 Group F. A manual fire alarm system shall be installed in all Group F occupancies.

907.2.5 Delete section and replace as follows:

"907.2.5 Group H. A manual fire alarm system shall be installed in Group H occupancies. An automatic detection system shall be installed for highly toxic gasses, organic peroxides and oxidizers in accordance with Chapters 37, 39 and 40 respectively.

907.2.7 Delete section and replace as follows:

"907.2.7 Group M. A manual fire alarm system shall be installed in all Group M occupancies

907.2.8.2. Delete exception.

907.2.8.1 Delete exceptions

907.2.9.1 Delete section and replace as follows:

"907.2.9.1 Manual fire alarm system. A manual fire alarm system that activates the occupant notification system in accordance with 907.6 shall be installed in all R-2 occupancies.

907.2.10.1 Delete exceptions.

907.2.10.2 Delete exceptions.

907.2.11 Add the following to the end of the section: "and the current State of Illinois Smoke Detector Act (425 ILCS 60/1, et. seq.) and all the rules and regulations of the Illinois State Fire Marshal".

907.2.11.1.1 Add the following to the end of the section:

"4. Within 15 feet outside of any sleeping area and in each sleeping room

5. At the top of every stair

6. Within 15 feet of any furnace

7. On each level of the building."

907.2.11.1.2 Add the following to the end of the section:

"4. Within 15 feet outside of any sleeping area and in each sleeping room.

5. At the top of every stair.

6. Within 15 feet of any furnace.

7. On each level of the building

907.2.11.4 Add the following to the end of the section:

"2. Group R-3 smoke alarms are to be 120 volt with a battery backup.

3. Smoke alarms are not required to be equipped with battery backup in Group R-1 where they are connected to an emergency electrical system."

907.2.24 Add new section as follows:

"907.2.24 Single and multiple station smoke alarms. Listed single-and multiple-station smoke alarms shall be installed in accordance with the provisions of this Code and the household fire warning equipment provisions of NFPA 72.

When a system is installed within a dwelling unit it shall comply with UL 217.

907.2.25 Add new section as follows:

"907.2.25 Where required in existing one and two family dwellings. All existing one and two family residences shall have installed therein smoke detectors in accordance with Illinois Smoke Detector Act. Every single-family residence shall have at least one smoke detector installed on every story, including basements, attics and crawlspaces with mechanical equipment installed in them, but not including unoccupied attics. Smoke detectors shall be installed in each room used for sleeping purposes and within 15 feet of the entrances of all rooms used for sleeping purposes. The signal shall be clearly audible within each room used for sleeping purposes over background noise levels with all intervening doors closed.

In single-family residences with split-levels, a smoke detector installed on the upper level shall suffice for the adjacent lower level if the lower level is less than one full story below the upper level. However, if there is an intervening door between the adjacent levels, a smoke detector shall be installed on each level.

907.2..26 Add new section as follows:

"907.2.26 Alterations, repairs, and additions. When interior alterations, repairs or additions requiring a permit occur, or when one or more sleeping rooms are added or created in existing dwellings, the individual dwelling unit shall be provided with smoke alarms located as required for new dwellings; the smoke alarms shall be interconnected and hard-wired.

**Exceptions:**

1. Smoke alarms in existing areas shall not be required to be interconnected and hard- wired where the alterations or repairs do not result in the removal of interior wall or ceiling finishes exposing the structure, unless there is an attic, crawl space, or basement available which could provide access for hard wiring and interconnection without the removal of interior finishes.

2. Repairs to the exterior surfaces of dwellings are exempt from the requirements of this section.

907.2.27 Add new section as follows:

"907.2.27 Mounting of detectors. All smoke detectors shall be mounted on the ceiling at least six feet from the wall, or on the wall six to twelve inches from the ceiling, except that all smoke detectors in interior common stairwells shall be on the uppermost ceiling.

907.2.28 Add new section as follows:

"907.2.28 Responsibility for installation. In single family and two family residences, it shall be the responsibility of the owner of the building or structure to supply and install all required smoke detectors. The owner shall be responsible for making reasonable efforts to test and maintain smoke detectors in interior common stairwells.

907.2.29 Add new section as follows:

"907.2.29 Maintenance of detectors. It shall be the responsibility of the tenant to test and provide general maintenance for the smoke detectors within the tenant’s dwelling unit and to notify the owner or an authorized agent of the owner, in writing, of any deficiencies, which the tenant cannot correct. The owner shall be responsible for providing the tenant with written information regarding smoke detector testing and maintenance.

907.2.30 Add new section as follows:

"907.2.30 Battery replacement. The tenant shall be responsible for replacement of any required batteries in the smoke detectors in the tenant's dwelling unit, except that the owner shall ensure that such batteries are in operating condition at the time the tenant takes possession of the dwelling unit. The tenant shall provide the owner or the authorized agent of the owner with access to the dwelling unit to correct any deficiencies in the smoke detector(s), which have been reported in writing to the owner or authorized agent of the owner.

907.2.31 Add new section as follows:

"907.2.31 Low-voltage system. At the option of the owner of the building or structure, a low-voltage, standard central smoke detection system may be installed in a single-family residence or two-family residence in lieu of battery-powered smoke detectors or hard-wired smoke detectors, provided that such low-voltage standard central smoke detection system meets the requirements for such a system set forth in the Ordinance codified in this Chapter or is otherwise approved by the Code Official.

907.2.32 Add new section as follows:

"907.2.32 Existing Multi-family (three or more dwelling units) buildings. All multi-family buildings when renovated or constructed hereafter, shall have installed therein hard-wired smoke detectors as provided in this subsection.

907.2.33 Add new section as follows:

"907.2.33 Smoke detector locations.

1. Each room used for sleeping purposes.

Exception: Existing multi-family buildings and structures have the option to install battery powered smoke detectors in lieu of hard-wired in sleeping areas. Hard-wire smoke detectors with battery back up is preferred.

2. In the immediate vicinity (minimum of 15 feet) of all entrances to rooms used for sleeping purposes and in each sleeping room

3. Within 15 feet of any furnace.

4. A smoke detector shall be installed in each interior common stairwell (at the top of the stairs).

5. A smoke detector shall be installed in each interior common corridor or hallway at intervals of not more than thirty (30) feet.

6. A smoke detector shall be installed within each laundry room, boiler, electrical and other service room, and each tenant and building maintenance storage room. The Code Official is authorized to require an approved alternative type of detector be installed where, during normal

operation, products or combustion or other conditions are present in sufficient quantity to actuate a smoke detector.

907.2.34 Add new section as follows:

"907.2.34 Access for maintenance. The tenant shall provide the owner or authorized agent of the owner with access to the dwelling unit to check, clean, test, maintain, repair and replace all smoke detectors therein.

907.2.35 Add new section as follows:

"907.2.35 Low voltage standard smoke detection system locations. The low-voltage, standard central smoke detection system shall be installed in all interior common stairwells, interior common corridors or hallways, laundry rooms, boiler, electrical and other service rooms, and tenant and building maintenance and storage rooms. The smoke detection devices connected to the low-voltage, standard central smoke detection system shall be located as provided in 907.3.9.1.

907.2.36 Add new section as follows:

"907.2.36 Hard wired smoke detector locations. A hard-wired smoke detector with battery back-up shall be installed in each room used for sleeping purposes. When more than one smoke detector is installed, all smoke detectors shall be so wired so that the actuation of one detector shall activate all the detectors in the dwelling unit.

907.2.37 Add new section as follows:

"907.2.37 Annunciator and panel control box. Each smoke detection device connected to the low-voltage, standard central smoke detection system shall be connected to an annunciator and a panel control box.

1. The annunciator shall have a visual indicator of alarm location and be installed in the entrance or on the exterior of each building or structure at the entrance, in a waterproof enclosure, as directed by the Code Official.

2. There shall be American with Disability Act (ADA) compliant horn/strobes installed in the interior common corridors, hallways, and stairwells leading to the dwelling units, which are clearly audible within such dwelling units over background noise levels with all intervening doors closed.

907.2.38 Add new section as follows:

"907.2.38 Fire alarm supervision. All new low-voltage, standard central smoke detection system installations shall be connected directly to the Village of Lake Bluff Dispatch Communication Center or a U. L. listed and approved Central Station via a two-way radio transmitter at the time the system is placed into operation.

907.2.39 Add new section as follows:

"907.2.39 Responsibility Maintenance. In multi-family buildings or structures it shall be the responsibility of the owner of the building or structure or authorized agent of the owner thereof to install, maintain, repair, and replace, if necessary, the low-voltage, standard central smoke detection system required hereby.

907.2.40 Add new section as follows:

"907.2.40 Maintenance and testing. The owner or authorized agent of the owner shall also be responsible for the continuous maintenance of such system through no less than an annual inspection and testing thereof performed under a written maintenance agreement with a reliable firm actively engaged in the servicing of such systems. A copy of each maintenance agreement shall be accompanied by a written report and a copy of such report shall be promptly delivered to the Village of Lake Bluff. Further, the current maintenance agreement and latest report shall be made available at all reasonable times for inspection by duly authorized personnel of the Village.

907.2.41 Add new section as follows:

"907.2.41 Power source for existing multifamily buildings. Smoke alarms are not required to be equipped with battery backup where they are connected to an emergency electrical system.

907.2.42 Add new section as follows:

"907.2.42 Heat detection device. Where a heat detection device or combination heat and smoke detection device will be more effective than a smoke detector as a result of conditions within the area in which the device is located, the heat detection device or combination heat and smoke detection device shall be installed in place of a smoke detector at the direction of the Code Official. The combination heat and smoke detection device shall bear the testing label of a nationally recognized, independent testing laboratory and shall meet the requirements of NFPA 72.

907.5.2 Add the following language to the end of the section: "Manual fire alarm boxes shall be installed in each Use Group described in this Code; they shall be installed in accordance with Sections 907.5.2.1 through and 907.5.2.5."

907.5.2.6 Add new section as follows:

"907.5.2.6 Separate zones. Manual fire alarm boxes, audio/visual devices and detectors are to be on separate zones per floor and device unless approved otherwise by the fire code official.

907.6.2.3.5 Add new section as follows:

"907.6.2.3.5 Multi-tenant Use Group M, F and S buildings. Multi-tenant Use Group M, F and S buildings will be “ring by tenant” activated by a fire sprinkler system flow switch for that space or automatic fire detection and shall include a weatherproof clear outside strobe over the entrance to each tenant space as directed by the fire code official. All outside strobes shall be 75 candela minimum.

907.7.5 Delete section and replace as follows:

"907.7.5 Monitoring. All required fire protective signaling systems located within the Village of Lake Bluff shall transmit alarm, supervisory, and trouble signals directly to the main dispatch Communication Center for the Village of Lake Bluff or an approved U.L. listed central monitoring station. This connection shall be made with a two-way radio transmitter installed at each location. All required fire protective signaling systems shall report directly to the Village of Lake Bluff main dispatch Communication Center or an approved U. L. listed central monitoring station via a two-way radio transmitter. Future methods of connection shall be determined by the Fire Chief.

Exceptions:

1. Single- and multi-station smoke detectors are required by Section 907.2.10.

2. Smoke detectors in buildings of Use Group I-3 occupancies).

3. Automatic sprinkler systems in one- and two-family dwellings.

907.10 Add new section as follows:

"907.10 Intentional false alarms. No person shall intentionally turn in a fire alarm when, in fact, such person knows that no fire exists. No person shall activate any fire alarm system or any fire suppression system for purposes other than emergency, maintenance, or prescribed testing.

912.7 Add new section as follows:

"912.7 Fire Department Connection types. All fire department connections shall be a 2 ½” X 2 ½” x 2 ½” Siamese NST connection, 4 inch Storz or as determined by the fire code official

1006.3 Add the following language to the end of the section: "6. All rooms containing the building fire sprinkler riser(s), fire pump(s) and fire alarm control panel(s) shall be provided with approved emergency lighting.

3302.1 Add the following to the definition of Fireworks:

"Fireworks: The term "fireworks" shall mean and include any explosive composition, or any substance or combination of substances, or article prepared for the purpose of producing a visible or audible effect of a

temporary exhibitional nature by explosion, combustion, deflagration or detonation, and shall include blank cartridges, toy cannons, in which explosives are used, the type of balloons which require fire underneath to propel the same, firecrackers, torpedoes, sky-rockets, Roman candles, bombs, or other fireworks of like construction and any fireworks containing any explosive compound, or any tablets or other device containing any explosive substance, or containing combustible substances producing visual effects, provided, however, that the term "fireworks" shall not include trick noise makers known as "party poppers", "booby traps", and "snappers"; toy pistols, toy canes, toy guns, or other devices in which paper or plastic caps containing twenty-five hundredths of grains or less of explosive compound are used, providing they are so constructed that the hand cannot come in contact with the cap when in place for the explosion; and toy pistol paper or plastic caps which contain less than twenty hundredths grains of explosive mixture.

Note: Devices such as sparklers, snake or glow worm pellets, trick matches, etc. that require an open flame, such as a match or lighter, to ignite are not permitted."

3304.1 Delete section and replace as follows:

**"**3304.1 General. The storage of explosive materials is prohibited within the Village.

3304.2 Delete sections 3304.2 through 3304.10.7.

3305.1 Delete section and replace as follows:

"3305.1 General. The manufacturing, assembly and testing of explosives, ammunition, blasting agents and fireworks is prohibited in the Village.

3305.2 Delete sections 3305.2 through 3305.9.

## CHAPTER 47
## REFERENCED STANDARDS

Chapter 47 Referenced Standards:

Delete ICC Electric Code and insert 2011 National Electric Code-NFPA 70

Delete International Plumbing Code and insert the Illinois State Plumbing Code

Delete the International Sewage Disposal Code and insert Illinois State Plumbing Code

NFPA The most current edition of all the NFPA Standards, except/deleting NFPA 1 and NFPA 5000, are adopted by reference and also in whole.

| | |
|---|---|
| Appendix B | Adopted by reference. |
| Appendix D | Adopted by reference. |
| Appendix E | Adopted by reference. |
| Appendix F | Adopted by reference. |
| Appendix I | Adopted by reference. |
| Appendix J | Adopted by reference. |

**TABLE B105.1**
**MINIMUM REQUIRED FIRE-FLOW AND FLOW DURATION FOR BUILDINGS**

| FIRE-FLOW CALCULATION AREA (square feet) | | | | | FIRE-FLOW (gallons per minute)[b] | FLOW DURATION (hours) |
|---|---|---|---|---|---|---|
| Type IA and IB[a] | Type IIA and IIIA[a] | Type IV and V-A[a] | Type IIB and IIIB[a] | Type V-B[a] | | |
| 0-22,700 | 0-12,700 | 0-8,200 | 0-5,900 | 0-3,600 | 1,500 | 2 |
| 22,701-30,200 | 12,701-17,000 | 8,201-10,900 | 5,901-7,900 | 3,601-4,800 | 1,750 | |
| 30,201-38,700 | 17,001-21,800 | 10,901-12,900 | 7,901-9,800 | 4,801-6,200 | 2,000 | |
| 38,701-48,300 | 21,801-24,200 | 12,901-17,400 | 9,801-12,600 | 6,201-7,700 | 2,250 | |
| 48,301-59,000 | 24,201-33,200 | 17,401-21,300 | 12,601-15,400 | 7,701-9,400 | 2,500 | |
| 59,001-70,900 | 33,201-39,700 | 21,301-25,500 | 15,401-18,400 | 9,401-11,300 | 2,750 | |
| 70,901-83,700 | 39,701-47,100 | 25,501-30,100 | 18,401-21,800 | 11,301-13,400 | 3,000 | 3 |
| 83,701-97,700 | 47,101-54,900 | 30,101-35,200 | 21,801-25,900 | 13,401-15,600 | 3,250 | |
| 97,701-112,700 | 54,901-63,400 | 35,201-40,600 | 25,901-29,300 | 15,601-18,000 | 3,500 | |
| 112,701-128,700 | 63,401-72,400 | 40,601-46,400 | 29,301-33,500 | 18,001-20,600 | 3,750 | |
| 128,701-145,900 | 72,401-82,100 | 46,401-52,500 | 33,501-37,900 | 20,601-23,300 | 4,000 | 4 |
| 145,901-164,200 | 82,101-92,400 | 52,501-59,100 | 37,901-42,700 | 23,301-26,300 | 4,250 | |
| 164,201-183,400 | 92,401-103,100 | 59,101-66,000 | 42,701-47,700 | 26,301-29,300 | 4,500 | |
| 183,401-203,700 | 103,101-114,600 | 66,001-73,300 | 47,701-53,000 | 29,301-32,600 | 4,750 | |
| 203,701-225,200 | 114,601-126,700 | 73,301-81,100 | 53,001-58,600 | 32,601-36,000 | 5,000 | |
| 225,201-247,700 | 126,701-139,400 | 81,101-89,200 | 58,601-65,400 | 36,001-39,600 | 5,250 | |
| 247,701-271,200 | 139,401-152,600 | 89,201-97,700 | 65,401-70,600 | 39,601-43,400 | 5,500 | |
| 271,201-295,900 | 152,601-166,500 | 97,701-106,500 | 70,601-77,000 | 43,401-47,400 | 5,750 | |
| 295,901-Greater | 166,501-Greater | 106,501-115,800 | 77,001-83,700 | 47,401-51,500 | 6,000 | |
| — | — | 115,801-125,500 | 83,701-90,600 | 51,501-55,700 | 6,250 | |
| — | — | 125,501-135,500 | 90,601-97,900 | 55,701-60,200 | 6,500 | |
| — | — | 135,501-145,800 | 97,901-106,800 | 60,201-64,800 | 6,750 | |
| — | — | 145,801-156,700 | 106,801-113,200 | 64,801-69,600 | 7,000 | |
| — | — | 156,701-167,900 | 113,201-121,300 | 69,601-74,600 | 7,250 | |
| — | — | 167,901-179,400 | 121,301-129,600 | 74,601-79,800 | 7,500 | |
| — | — | 179,401-191,400 | 129,601-138,300 | 79,801-85,100 | 7,750 | |
| — | — | 191,401-Greater | 138,301-Greater | 85,101-Greater | 8,000 | |

For SI: 1 square foot = 0.0929 $m^2$, 1 gallon per minute = 3.785 L/m, 1 pound per square inch = 6.895 kPa.
a. Types of construction are based on the *International Building Code*.
b. Measured at 20 psi residual pressure.

## APPENDIX D

# FIRE APPARATUS ACCESS ROADS

***The provisions contained in this appendix are not mandatory unless specifically referenced in the adopting ordinance.***

### SECTION D101
### GENERAL

**D101.1 Scope.** Fire apparatus access roads shall be in accordance with this appendix and all other applicable requirements of the *International Fire Code*.

### SECTION D102
### REQUIRED ACCESS

**D102.1 Access and loading.** Facilities, buildings or portions of buildings hereafter constructed shall be accessible to fire department apparatus by way of an *approved* fire apparatus access road with an asphalt, concrete or other *approved* driving surface capable of supporting the imposed load of fire apparatus weighing at least 75,000 pounds (34 050 kg).

### SECTION D103
### MINIMUM SPECIFICATIONS

**D103.1 Access road width with a hydrant.** Where a fire hydrant is located on a fire apparatus access road, the minimum road width shall be 26 feet (7925 mm), exclusive of shoulders (see Figure D103.1).

**D103.2 Grade.** Fire apparatus access roads shall not exceed 10 percent in grade.

**Exception:** Grades steeper than 10 percent as *approved* by the fire chief.

**D103.3 Turning radius.** The minimum turning radius shall be determined by the *fire code official*.

**D103.4 Dead ends.** Dead-end fire apparatus access roads in excess of 150 feet (45 720 mm) shall be provided with width and turnaround provisions in accordance with Table D103.4.

**TABLE D103.4**
**REQUIREMENTS FOR DEAD-END FIRE APPARATUS ACCESS ROADS**

| LENGTH (feet) | WIDTH (feet) | TURNAROUNDS REQUIRED |
|---|---|---|
| 0–150 | 20 | None required |
| 151–500 | 20 | 120-foot Hammerhead, 60-foot "Y" or 96-foot-diameter cul-de-sac in accordance with Figure D103.1 |
| 501–750 | 26 | 120-foot Hammerhead, 60-foot "Y" or 96-foot-diameter cul-de-sac in accordance with Figure D103.1 |
| Over 750 | Special approval required | |

For SI: 1 foot = 304.8 mm.

**D103.5 Fire apparatus access road gates.** Gates securing the fire apparatus access roads shall comply with all of the following criteria:

1. The minimum gate width shall be 20 feet (6096 mm).
2. Gates shall be of the swinging or sliding type.

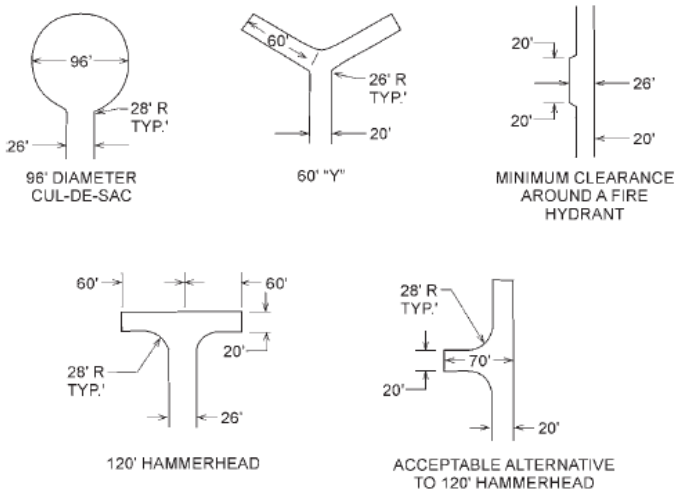


For SI: 1 foot = 304.8 mm.

**FIGURE D103.1**
**DEAD-END FIRE APPARATUS ACCESS ROAD TURNAROUND**



# CHAPTER 6

# 2004 ILLINOIS PLUMBING CODE

9-6-1 Adoption Of Illinois Plumbing Law:

The provisions of the Illinois Plumbing License Law, 225 ILCS 320/0.01 et seq. and the regulations adopted thereunder in 68 Ill. Admin. Code 750.100 et seq. and 77 Ill. Admin. Code 890.110 et. Seq. (collectively "Illinois Plumbing Law") shall regulate the licensing of plumbers, the registration of irrigation contractors, and the design and installation of plumbing systems, including but not limited to sanitary and storm drainage, sanitary facilities, water supplies and storm water and sewage disposal. The Village hereby adopts the 2004 edition of the Illinois Plumbing Code.

9-6-2 Illinois Plumbing Law on File: Complete printed copies of the Illinois Plumbing Code/Law, herein adopted, are available for public use and inspection at the office of the Village Clerk.

9-6-3 Amendments to the Illinois Plumbing Law:

The following sections of the 2004 Illinois Plumbing Code/Law are hereby amended, revised, and changed as follows. Subsequent section numbers used in this Chapter shall refer to the like numbered sections of the Illinois Plumbing Law:

890.320(c) Delete Section.

890.320(j) Delete Section.

890.1200(a) Delete Section and replace as follows:

"(a) Water Service Pipe Sizing. The water- service pipe from the street main to the water- distribution systems for the building shall be of sufficient size to provide an adequate flow of water to meet the minimum requirements per this section 890-1200. The new water service pipe and fittings shall be at least one and one half inches (1 /1/2") in diameter."

890.APP. A Approved Materials for Building Sewer. Delete paragraph 2 and replace as follows:

"(2) Asbestos Cement Pipe and Bituminized Fiber Pipe shall NOT be used."

890.APP. A Approved Materials for Water Service Pipe. Delete paragraphs 1, 4, 8, 9, 10, and 11 and replace each paragraph as follows:

"(1) Aceylonite Butadiene Stryene (ABS) Pipe shall NOT be used."

"(4) Chlorinated polyvinyl chloride (CPVC) Pipe shall NOT be used."

"(8) Poly Butylene (PB) Pipe/Tubing shall NOT be used."

"(9) Polyethylene (PE) Pipe shall NOT be used."

"(10) Polyethylene (PE) Tubing: shall NOT be used."

"(11) Polyvinyl chloride (PVC) Pipe: shall NOT be used."

890.APP. A Approved Materials for Water Distribution Pipe. Delete paragraph 7 and replace as follows:

"(7) Poly Butylene (PB) Pipe/Tubing shall NOT be used.

2902 Add the following new Section 2902 as follows:

"SECTION 2902
ADDITIONAL SPECIAL RULES

2902.1 Additional Special Rules. The following additional special rules and regulations are hereby adopted as a part of this code:

1. All water pipe shall be run in Type “L” copper for interior above ground and below grade water pipe shall be run in Type “K” soft copper. PVC water pipe is not allowed.

2. All sanitary sewer services are to be installed with a length of Ductile Iron pipe through the foundation wall and spanning the over dig at the outside of the house to prevent shearing at the foundation. The service is to have a clean out of equal size extended to grade outside of the building at the end of the ductile iron.

3. All new sanitary lines shall be overhead type sewers to prevent possible surcharging the basement.

4. All new storm sewer connections are to be cored and installed with a core and T boot when connected to a Village main or manhole.

5. All storm sewer pipe is to be installed with SDR 26 PVC type pipe or approved equal.

6. All directional bored storm or sanitary lines shall be inspected by use of a video camera supplied by contractor after installation to verify integrity and proper pitch of pipe. Village inspector to be on site at time video is taken.

7. Eliminate the use of Polyvinyl Chloride (PVC) pipe with Cellular Core. See Appendix A 12 of the Illinois Plumbing Law.

8. All new sewer pipe connections of dissimilar material are to be made with no shear type fittings.

9. No cross connections of any nature or description shall be permitted between the sanitary system and the storm sewerage system of any house premises or building in the Village, nor shall any sump pump or drainage system of any nature be cross connected with or between said sanitary and storm systems. Relocation of storm sewer discharge is to be approved by the Village.

10. All new and storm sewer connections are to be bed in granular material as approved by the Building Department. Granular material is to be installed to a level 4 inches above the pipe.

11. Water Service to any premise shall not be less than on and one half inch (1 ½") inside diameter and shall be installed to a depth of not less than 5 feet or more than seven feet. Water services one and one half inch or two inch diameter shall be type K copper. Water services of greater than 2 inch in diameter may be of cement lined ductile cast iron pipe.

12. Where a domestic water line is serving a property and additional well for water will not be permitted unless otherwise approved by a special use permit."

13. When a new water meter or new water service is installed in an existing, renovated or new building or there is a new occupancy or occupant/owner of a building then a ½" metallic conduit shall be installed from the meter to the street side of the building so that a remote water meter reader can be wired and installed. The location of the conduit can be verified with the building official.

# CHAPTER 7
# 2008 NATIONAL ELECTRICAL CODE (NFPA 70)

9-7-1 Adoption Of 2011 National Electrical Code:

There is hereby adopted by the Village the 2011 National Electrical Code (NFPA 70) as hereinafter amended (hereinafter the "Electrical Code"). At least one copy of the 2011 National Electrical Code (NFPA 70) has been on file in the office of the Village Clerk for a period of at least 30 days prior to the adoption of these provisions and remains on file in the office of the Village Clerk, and is hereby adopted and incorporated as fully as if set out at length herein.

9-7-2 Amendments to the Electrical Code:

The following sections of the Electrical Code are hereby amended as set forth in this Section 9-7-2. Subsequent section numbers used in this Chapter shall refer to like numbered sections of NFPA 70:

110.5 Delete Section 110.5 and replace as follows:

"110.5 Conductors. Conductors normally used to carry current shall be of copper. The sizes given in this code shall apply to copper conductors."

225.6(B) Delete Section 225.6 (B) and replace as follows:

"225.6(B) Festoon Lighting. Not permitted."

230.42(D) Add the following new Section 230.42(D):

230.42(D) Ungrounded Conductors. Ungrounded conductors shall not be smaller than:

1. 200-ampere, 3 wire, for a one family dwelling.

2. 100-ampere, 3 wire, for an existing one family dwelling.

3. 60-amperes for other loads.

Exceptions:

(a) For loads consisting of not more than two 2-wire branch circuits, No. 6 copper.

(b) By special permission, for loads limited by demand or by the source of supply, No.6 copper.

(c) For limited loads of a single branch circuit, No. 12 copper, but in no case smaller than the branch circuit conductors."

230.43 Delete Section 230.43 and replace as follows:

"230.43 Wiring Methods for 600 Volts or Less. Service entrance conductors shall be installed in accordance with the applicable

requirements of this code covering the type of wiring method used and limited to the following methods:

1. Rigid Metal Conduit
2. Intermediate Metal Conduit
3. Electrical Metallic Tubing
4. Wireways
5. Busways
6. Auxiliary Gutters
7. Cablebus"

250.64(A) Delete Section 250.64(A) and replace as follows:

"(A) Aluminum or Copper-Clad Aluminum Conductors. Bare aluminum or copper-clad aluminum grounding conductors shall not be used."

300.22(B) Delete the first sentence of Section 300.22(B) and replace as follows:

"300.22(B) Ducts or Plenums Used for Environmental Air. Only wiring methods consisting of electrical metallic tubing, intermediate metal conduit or rigid conduit shall be installed in ducts or plenums specifically fabricated to transport environmental air.

410.16(D) Add new sub section Luminaires Required (Fixtures) in Clothes Closets" as follows:

"410.16(D) Luminaries in Clothes Closets. A light fixture shall be installed in closets."

2701.2 Add the following new Section 2701.2 as follows:

"2701.2 Additional Special Rules. The following special rules and regulations are hereby adopted as part of this International Building Code and International Residential Code

1. All electrical wiring shall be in intermediate metallic conduit, rigid conduit, electrical metallic tubing as specified in NFPA 70, except that other types of conduit or wiring protection may be permitted by the building official.

2. Conduit on or below grade shall be galvanized rigid. All exterior conduit shall be rigid (steel or aluminum) or intermediate metallic.

3. When a question arises as to method or material used, the ruling of the Building Official shall govern.

4. All unused or abandoned electrical equipment shall be removed."

2701.3 Add the following new Section 2701.3:

"2701.3 Registration. It shall be unlawful for any person, firm, or corporation to engage in the business of an electrical contractor or electrical contractor limited, without being registered as an electrical contractor or electrical contractor limited."

2701.4 Add the following new Section 2701.4

"2701.5 Electrical Equipment. All buildings (other than one and two family dwellings) shall provide an electric shunt switch, of the type approved by the fire code official, that will disconnect all power to the building, except emergency generator power, or electric company main vaults (constructed per code) and be placed at a location approved by the fire code official.

Exceptions:

1. Existing buildings, unless being renovated or change of use or have the installation of a new electrical panel or service, will be exempt from this requirement

2. One and two family dwellings are exempt from the electric shunt switch but shall have an exterior disconnect for the main electric service."

# CHAPTER 8
# 2012 INTERNATIONAL FUEL GAS CODE

9-8-1 Adoption Of 2012 International Fuel Gas Code:

There is hereby adopted by the Village the 2012 International Fuel Gas Code as hereinafter amended (hereinafter the "Fuel Gas Code"). At least one copy of the 2012 International Fuel Gas Code has been on file in the office of the Village Clerk for a period of at least 30 days prior to the adoption of these provisions and remains on file in the office of the Village Clerk, and is hereby adopted and incorporated as fully as if set out at length herein.

9-8-2 Amendments to the Fuel Gas Code:

The following sections of the Fuel Gas Code are hereby amended as set forth in this Section 9-8-2. Subsequent section numbers used in this Chapter shall refer to like numbered sections of the Fuel Gas Code:

101.1 Delete Section 101.1 and replace as follows:

"101.1 Title. These regulations shall be known as the *Lake Bluff Fuel Gas Code*, hereinafter referred to as this "code."

103.1 Delete Section 103.1 and replace as follows:

"103.1 General. The Building Commissioner, as provided for in Title IV of the Village of Lake Bluff Village Code, or his or her designee, shall be the code official in charge of administering this International Fuel Gas Code and shall be known as the code official."

106.5 Delete Section 106.5 and replace as follows:

"106.5 Permit issuance. The application, construction documents and other data filed by an applicant for a permit shall be reviewed by the code official. If the code official finds that the proposed work conforms to the requirements of this code and all laws and ordinances applicable thereto, and that the fees specified in Section 1-12-3 of the Municipal Code have been paid, a permit shall be issued to the applicant."

106.6 Delete Section 106.6 and replace as follows:

"106.6 Fees. A permit shall not be issued until the fees prescribed in the Village of Lake Bluff Comprehensive Fee Schedule contained in Title I Chapter 10 of the Lake Bluff Code, have been paid, nor shall an amendment to a permit be released until the additional fee, if any, due to an increase of the mechanical system, has been paid."

106.6.2 Delete Section 106.6.2 and replace as follows:

"106.6.2 Fee schedule. The fees for mechanical work shall be as indicated in Section 1-12-3 of the Municipal Code.

106.6.3 Delete Section 106.6.3.

108.4 Delete Section 108.4 and replace as follows:

"108.4 Violation penalties. Persons who shall violate a provision of this code or shall fail to comply with any of the requirements thereof or who shall erect, install, alter or repair mechanical work in violation of the approved construction documents or directive of the code official, or of a permit or certificate issued under the provisions of this code, shall be subject to the penalties set forth in Section 9-1-22 of this Title.

108.5 Delete Section 108.5 and replace as follows:

"108.5 Stop work orders. Upon notice from the code official that mechanical work is being done contrary to the provisions of this code or in a dangerous or unsafe manner, such work shall immediately cease. Such notice shall be in writing and shall be given to the owner of the property, or to the owner's agent, or to the person doing the work. The notice shall state the conditions under which work is authorized to resume. Where an emergency exists, the code official shall not be required to give a written notice prior to stopping the work. Any person who shall continue to work on the system after having been served with a stop work order, except such work as that person is directed to perform to remove a violation or unsafe condition, shall be liable for penalties as set forth in Section 9-1-22 of this Title."

109 Delete Section 109 and replace as follows:

"Section 109.1 Application for appeal. A person shall have the right to appeal a decision of the code official to the Village of Lake Bluff Architectural Board of Review. The applicant shall make written notice for the appeal and such appeal shall be based on a claim that the true intent of this code or the rules legally adopted thereunder have been incorrectly interpreted, the provisions of the code do not fully apply, or an equally good or better form of construction is proposed."

306.3 Delete Section 306.3 and replace as follows:

"306.3 Appliances in attics. Attics containing appliances shall be provided with a conditioned space with a floor drain, approved fire suppression/fire sprinklers installed according to NFPA 13, smoke detection interconnected with the smoke detectors in the remainder of the structure, and a pull down stair or permanent stair that provides for access to and replacement of the appliance(s). There shall be a passageway of solid continuous flooring to this space not less than 36 inches wide. A level service space of not less than 30 inches deep and 30 inches wide shall be present at the front and or service side(s) of the appliance(s)."

306.3.1 "306.3.1 Electrical requirements. A luminaire controlled by a switch located at the required stairway opening and a receptacle outlet shall be provided at or near the appliance location in accordance with NFPA 70."

306.4.2 Add new Section 306.4.2 as follows:

"Section 306.4.2 Fire Suppression requirements. All appliances located under floors shall be provided with and protected by an approved fire suppression/fire sprinkler system installed according to NFPA 13."

403.1.1 Add new Section 403.1.1 as follows:

"403.1.1 Piping materials. All interior gas piping shall be installed in black iron pipe or approved metallic pipe."

| | |
|---|---|
| Appendix A | Adopted by reference. |
| Appendix B | Adopted by reference. |
| Appendix C | Adopted by reference. |
| Appendix D | Adopted by reference |

# CHAPTER 9
# ILLINOIS ACCESSIBILITY LAW
# ILLINOIS ENVIRONMENTAL BARRIERS ACT

9-9-1 Enforcement of Illinois Accessibility Law. The Village shall enforce the provisions of the Illinois Environmental Barriers Act, 410 ILCS 25/1 et seq., and the regulations adopted hereunder in 71 Ill. Admin. Code 400.110 et seq. (collectively "Illinois Accessibility Law") shall regulate the control of buildings and structures and each and all of the regulations, provisions, penalties, conditions and terms of the Illinois Accessibility Law are hereby referred to, adopted and made a part thereof, as if fully set forth in this Title with the additions, insertions, deletions and changes hereinafter prescribed.

9-9-2 Purpose. The purpose of this Illinois Accessibility Code (IAC or Code) is to implement the Environmental Barriers Act (EBA) [410 ILCS 25] and to replace the former version of the Code (71 Ill. Adm. Code 400) effective May 1, 1988. This Code is intended to ensure that the built environment, including all spaces and elements of all applicable buildings and facilities in the State of Illinois, is so designed, constructed, and/or altered to assure the safety and welfare of all members of society and to be readily accessible to, and usable by, environmentally limited persons.

This Code is also intended to resolve areas of difference between the federal accessibility standards, Americans with Disabilities Act Accessibility Guidelines (ADAAG), which are applicable to buildings and facilities covered by the Americans with Disabilities Act (ADA), and the Illinois accessibility standards, IAC, which are applicable to buildings and facilities in the State of Illinois covered by the EBA. The drafters of this Code compared and adopted the stricter of State or federal accessible design standards.

This Code, together with the Environmental Barriers Act (EBA) and the standards incorporated by reference identified in Section 400.120, has the force of a building code and as such is law in the State of Illinois.

# CHAPTER 10
# 2012 INTERNATIONAL ENERGY CONSERVATION CODE ANSI/ASHRAE/IESNA STANDARD 90.1-2007 ENERGY STANDARD FOR BUILDINGS

9-10-1 Adoption of Codes. There is hereby adopted by the Village the 2012 International Energy Conservation Code and the ANSI/ASHRAE/IESNA Standard 90.1-2007 Energy Standard For Buildings as hereinafter amended (hereinafter the "Energy Code"). The provisions of the Illinois Energy Conservation Act, 20 ILCS 1115/1 et seq., and the regulations adopted hereunder, shall apply to all buildings as specified in the Act and all buildings in the Village of Lake Bluff including residential structures. At least one copy of the 2012 International Energy Conservation Code has been on file in the office of the Village Clerk for a period of at least 30 days prior to the adoption of these provisions and remains on file in the office of the Village Clerk, and is hereby adopted and incorporated as fully as if set out at length herein.

9-10-2 Amendments, Revisions, and Changes. The following sections of the 2012 International Energy Conservation Code are hereby added, amended, revised, and changed as follows:

C101.1 Delete Section C101.1 and replace as follows:

"C101.1 Title. These provisions shall be known as the *Lake Bluff International Energy Conservation Code*, and shall be cited as such and will be referred to herein as this "code."

C107.2 Delete Section C107.2 and replace as follows:

"C107.2 Schedule of permit fees. A fee for each permit shall be paid as required, in accordance with the Village of lake Bluff Comprehensive Fee Schedule contained in Title I Chapter 10 of the lake Bluff Code.

C107.5 Delete Section C107.5

C108.4 Delete Section C108.4 and replace as follows:

"Section C108.4 Failure to Comply. Any person who shall continue any work after having been served with a stop work order, except such work as that person is directed to perform to remove a violation or unsafe condition, shall be liable for a fine as provided in Section 9-1-22 of this Title.

C109 Delete Section C109 and replace as follows:

"Section C109 Application for Appeal

Section C109.1 Application for Appeal. A person shall have the right to appeal a decision of the code official to the Village of Lake Bluff Architectural Board of Review. The applicant shall make written notice for the appeal and such appeal shall be based on a claim that the true intent of this code or the rules legally adopted thereunder have been incorrectly interpreted, the provisions of the code do not fully apply, or an equally good or better form of construction is proposed."

# CHAPTER 11
# 2012 INTERNATIONAL MECHANICAL CODE

9-11-1 Adoption of Code. There is hereby adopted by the Village the 2012 International Mechanical Code, as hereinafter amended (hereinafter the "Mechanical Code"). At least one copy of the 2012 International Mechanical Code has been on file in the office of the Village Clerk for a period of at least 30 days prior to the adoption of these provisions and remains on file in the office of the Village Clerk, and is hereby adopted and incorporated as fully as if set out at length herein.

9-11-2 Amendments, Revisions, and Changes.

The following sections of the 2009 International Mechanical Code are hereby amended, revised, and changed as follows:

101.1 Delete Section 101.1 and replace as follows:

"101.1 Title. These regulations shall be known as the *Lake Bluff Mechanical Code*, and hereinafter referred to as this "code."

103.1 Delete Section 103.1 and replace as follows:

"103.1 General. The Building Commissioner, as provided for in Section 1-6I-1 of the Municipal Code, or his or her designee, shall be the code official in charge of administering this International Mechanical Code and shall be known as the Mechanical Code Official."

106.4 Delete Section 106.4 and replace as follows:

"106.4 Permit issuance. The application, construction documents and other data filed by an applicant for a permit shall be reviewed by the code official. If the code official finds that the proposed work conforms to the requirements of this code and all laws and ordinances applicable thereto, and that the fees specified in Section 1-12-3 of the Municipal Code, have been paid, a permit shall be issued to the applicant."

106.5 Delete Section 106.5 and replace as follows:

"106.5 Fees. A permit shall not be issued until the fees prescribed in Section 1-12-3 of the Municipal Code have been paid, nor shall an amendment to a permit be released until the additional fee, if any, due to an increase of the mechanical system, has been paid."

106.5.2 Delete Section 106.5.2 and replace as follows:

"106.5.2 Fee schedule. The fees for mechanical work shall be as indicated in Section 1-12-3 of the Municipal Code.

106.5.3 Delete Subsection 106.5.3.

108.4 Delete Section 108.4 and replace as follows:

"108.4 Violation penalties. Persons who shall violate a provision of this code or shall fail to comply with any of the requirements thereof or who shall erect, install, alter or repair mechanical work in violation of the approved construction documents or directive of the code official, or of a

permit or certificate issued under the provisions of this code, shall be guilty of a misdemeanor, punishable by those penalties set forth in Section 9-1-22 of this Title.

108.5 Delete Section 108.5 and replace as follows:

"108.5 Stop work orders. Upon notice from the code official that mechanical work is being done contrary to the provisions of this code or in a dangerous or unsafe manner, such work shall immediately cease. Such notice shall be in writing and shall be given to the owner of the property, or to the owner's agent, or to the person doing the work. The notice shall state the conditions under which work is authorized to resume. Where an emergency exists, the code official shall not be required to give a written notice prior to stopping the work. Any person who shall continue to work on the system after having been served with a stop work order, except such work as that person is directed to perform to remove a violation or unsafe condition, shall be liable for penalties as set forth in Section 9-1-22 of this Title.

109 Delete Section 109 and replace as follows:

"Section 109
Application for Appeal

Section 109.1 Application for Appeal. A person shall have the right to appeal a decision of the code official to the Village of Lake Bluff Architectural Board of Review. The applicant shall make written notice for the appeal and such appeal shall be based on a claim that the true intent of this code or the rules legally adopted thereunder have been incorrectly interpreted, the provisions of the code do not fully apply, or an equally good or better form of construction is proposed.

306.3 Delete Section 306.3 and replace as follows:

"306.3 Appliances in attics. Attics containing appliances shall be provided with a conditioned space with a floor drain, an approved fire suppression/fire sprinkler system installed according to NFPA 13, smoke detection interconnected with the smoke detectors in the remainder of the structure, and a pull down stair or permanent stair that provides for access to and replacement of the appliance(s). There shall be a passageway of solid continuous flooring to this space not less than 36 inches wide. A level service space of not less than 30 inches deep and 30 inches wide shall be present at the front and or service side(s) of the appliance(s)." This shall apply to residential structures as well.

306.3.1 Delete Section 306.3.1 and replace as follows:

"306.3.1 Electrical requirements. A luminaire controlled by a switch located at the required stairway opening and a receptacle outlet shall be provided at or near the appliance location in accordance with NFPA 70."

306.4.2 Add Section 306.4.2 and replace as follows:

"Section 306.4.2 Fire Suppression requirements. All appliances located under floors shall be provided with and protected by an approved fire suppression/fire sprinkler system installed according to NFPA 13.

603.1 Delete Section 603.1 and replace as follows:

"603.1 General. An air distribution system shall be designed and installed to supply the required distribution of air. The installation of an air distribution system shall not affect the fire protection requirements specified in the International Building Code or Village of Lake Bluff adopted amendments. Ducts shall be constructed, braced, reinforced, and installed to provide structural strength and durability. All ducts shall be constructed of metallic materials.

603.5.1 Delete Section 603.5.1.

Appendix A Adopted by reference.

# CHAPTER 12
# GREEN BUILDING GUIDELINES

9-12-1 Recommended Green Building Standards. The Village highly encourages the use of "green" or sustainable building practices. As such, the Village has identified the 2012 International Green Construction Code as a useful minimum standard for permit applicants who wish to follow green building practices. Those persons who desire to use sustainable building practices are encouraged to use the 2012 International Green Construction Standard or to consult with the Code Official to identify other appropriate sustainable building standards for either residential or non-residential building projects.

# CHAPTER 13
# 2012 INTERNATIONAL SWIMMING POOL AND SPA CODE

9-13-1 Adoption Of 2012 INTERNATIONAL SWIMMING POOL AND SPA CODE:

There is hereby adopted by the Village the 2012 International Swimming Pool and Spa Code (hereinafter the "Swimming Pool Code"). At least one copy of the 2012 International Swimming Pool and Spa Code has been on file in the office of the Village Clerk for a period of at least 30 days prior to the adoption of these provisions and remains on file in the office of the Village Clerk, and is hereby adopted and incorporated as fully as if set out at length herein.

The State of Illinois has promulgated rules and regulations for public swimming pools, spas and beaches under Illinois Administrative Code Title 77 Chapter 1 Subchapter n Part 820. Additional references to this can be found under 210 ILCS 125\et seq. The adoption of the 2012 International Swimming Pool and Spa Code does not supersede the State of Illinois rules and regulations/laws unless the Swimming Pool Code is more restrictive in requirements.

305.1 Delete Exception #2:

Exception #2
Swimming Pools with a powered safety cover that complies with ASTM 1346

# CHAPTER 14
# 2012 INTERNATIONAL EXISTING BUILDING CODE

9-14-1 Adoption Of 2012 INTERNATIONAL EXISTING BUILDING CODE:

There is hereby adopted by the Village the 2012 International Existing Building Code and as amended hereafter. At least one copy of the 2012 International Existing Building Code has been on file in the office of the Village Clerk for a period of at least 30 days prior to the adoption of these provisions and remains on file in the office of the Village Clerk, and is hereby adopted and incorporated as fully as if set out at length herein.

9-14-2 Add new Section [A]101.4.3 Automatic Fire Sprinkler System

1. Notwithstanding anything contained in this International Existing Building Code to the contrary, in all areas of the Village, automatic fire sprinkler systems must be installed and maintained in all newly constructed buildings.

2. Any existing building (other than single family and two family residential dwellings) that undergoes any work or renovations that requires a building permit, has a change of use or occupancy type, or is improved with an addition to the building shall be required to add an approved fire sprinkler system if the fire sprinkler system would be required by the applicable sections of the 2012 International Existing Buildings Code. Except as otherwise specifically prescribed, complete automatic fire sprinkler systems shall also be installed wherever specified by this International Building Code.

3. All existing non-residential buildings, mixed use buildings and multi-family residential buildings with more than two residential units, shall provide a complete automatic fire sprinkler system by January 1, 2026, except that existing churches (A-3 Use Group Section 303) are exempt.

4. Whenever access to a building or structure will be unduly difficult because of secured openings, and where immediate access will be required for life saving and fire protection purposes, the fire code official may require an approved key box to be in a readily accessible location approved by the fire code official."

9-14-3 Add new Section [A]101.4.4 Fire Alarm System:

Where required. Notwithstanding anything contained in this International Building Code to the contrary, all newly constructed buildings, renovation and remodeling, change of occupant, change of ownership or additions thereto in non-residential zoned areas of the Village and mixed use buildings and other buildings in residential zoning districts, and all newly constructed attached residential dwellings consisting of more than two units, or additions thereto, shall have installed and maintained therein, an automatic fire alarm system. Except as otherwise specifically prescribed, complete automatic fire alarm systems shall also be installed wherever specified by this Code."

# CHAPTER 15
# ARCHITECTURAL REVIEW

9-15-1 Findings and Purpose.

A. The Village Board of Trustees hereby finds that excessive similarity, or dissimilarity, in design and appearance of buildings and other structures, in relation to the prevailing design and appearance of property in the vicinity thereof:

1. Adversely affects the desirability of immediate and neighboring areas and impairs the benefits of occupancy of existing property in such areas;

2. Impairs the stability and taxable value of land and buildings in such areas;

3. Prevents the most appropriate use of real estate and the most appropriate development of such areas;

4. Produces degeneration of property in such areas with attendant deterioration of conditions affecting the public health, safety, comfort, morals and well being of the citizens thereof;

5. Deprives the Village of tax revenue which it other-wise could receive; and/or

6. Destroys a proper balance in relationship between the taxable value of real property in such areas and the cost of the municipal services provided therefor.

B. In order to protect the Village of Lake Bluff's natural and architectural environment, to enhance property values, and to promote the health, safety, and welfare of the Village and its residents, the Board of Trustees has established these architectural review procedures and regulations.

9-15-2 General Prohibition. No building permit shall be issued for any proposed construction, alteration, enlargement, or remodeling of the exterior of any new or existing building (collectively referred to as "Construction") within any residential zoning district in the Village if such Construction would produce any of the harmful effects listed in this chapter.

9-15-3 Review of Building Permit Applications.

A. All applications for building permits for Construction within a residential district shall be reviewed by the Building Commissioner for purposes of determining whether such Construction will produce any of the harmful effects listed in this Chapter.

B. Within 30 days after the date on which the applicant first submitted the full and complete building permit application to the village, the Building Commissioner shall either:

1. Issue the building permit, if the Building Commissioner determines that none of the harmful effects listed in this chapter will be produced by the proposed Construction; provided, however, that no building permit shall be issued unless all other applicable Village Code provisions are satisfied; or

2. Give written direction to the Village Administrator to refer the building permit application to the Architectural Board of Review for a formal review pursuant to this Chapter 11, if the Building Commissioner determines that the proposed Construction may produce any of the harmful effects listed in this chapter; or

3. Seek input from the Board of Trustees, in which case if any three, but not less than three, members of the Board of Trustees determines that the proposed Construction may produce any of the harmful effects listed in this chapter, such three members shall give written direction to the Village Administrator to refer the building permit application to the Architectural Board of Review for a formal review pursuant to this Chapter.

9-15-4 Pre-building Permit Application Inquiry. Prior to the submittal of detailed design drawings as part of a formal building permit application, an applicant may, at its option, submit to the Building Commissioner a site plan, a floor plan, and all exterior elevations of the proposed Construction for the purpose of determining compliance with the requirements of this Chapter 13. In the event that the Building Commissioner determines that the proposed Construction will not produce one or more of the harmful effects listed in this Chapter, the issuance of the building permit shall not be withheld by the Building Commissioner on the basis of any provision in this Chapter; provided, however, that any three, but not less than three, members of the Board of Trustees may overrule the determination of the Building Commissioner and require that the building permit application, when formally submitted, be referred to the Architectural Board of Review for a formal review pursuant to this Chapter.

9-15-5 Architectural Review Hearing. If an architectural review hearing is required pursuant to any section of this Chapter, the following shall occur:

A. The applicant shall submit to the Village Administrator at the Village Hall during regular business hours the following hearing application materials:

1. A non-refundable application fee as provided in the Village Comprehensive Fee Schedule contained in Section 1-13-3 of the Municipal Code plus an amount determined by the Village Administrator to reimburse the Village for all anticipated out-of-pocket expenses incurred in connection with the delivery of notice pursuant to this Chapter;

2. Ten copies of a site plan showing all relevant zoning information and all improvements on the subject property (existing and proposed), including driveways, walkways, and fencing;

3. Ten copies of elevation drawings of the proposed Construction;

4. Ten copies of a description of the type, color, and texture of the exterior building materials; and

5. Ten copies of a vicinity map showing the approximate locations and dimensions of all buildings, structures, and significant natural or topographical features of the subject property and all adjoining properties.

B. The Village Administrator shall notify the chairperson of the Architectural Board of Review, who shall set a date for the hearing. Such hearing date shall be held as soon as possible, but in no event later than 45 days after the filing of the hearing application materials, unless the applicant waives or extends the 45-day period in writing.

C. After a hearing date has been established, the Village Administrator shall notify, in writing, the applicant either in person or by certified or registered mail, return receipt requested, not more than 30, nor less than 15, days before the hearing. The notice shall state the time, place, and purpose of the hearing and shall state that the applicant will have an opportunity to be heard and to present evidence to the Architectural Board of Review.

D. After a hearing date has been established, the Village Administrator shall notify, in writing, the owners, as evidenced by authentic tax records from Lake County, of all property within 300 feet (including the number of feet occupied by all public roads, streets, alleys, and other public ways) in each direction of the subject property not more than 30, nor less than 15, days before the hearing. The notice shall be by certified or registered mail, return receipt requested, and state the time, place, and purpose of the hearing and that the property owner will have an opportunity to be heard and to present evidence to the Architectural Board of Review.

E. The chairperson shall open each hearing and determine whether a quorum of the Architectural Board of Review is present. If less than a quorum is present at a hearing, the hearing shall be continued, provided that the continued hearing date is within the period established in this Chapter for commencing such hearing.

F. The chairperson shall preside over any architectural review hearing and shall permit the applicant and any interested party (including, without limitation, any resident of, or owner of property in, the Village of Lake Bluff) to address the Architectural Board of Review and present evidence. All proceedings of the Architectural Board of Review shall be recorded. Nothing in this Paragraph F shall prevent the chairperson from limiting the amount of time that a person may address the Architectural Board of Review. After all the evidence has been presented and all interested parties have had an opportunity to be heard, the Architectural Board of Review shall consider all the evidence presented at the hearing, including the application materials, and determine whether the proposed Construction will cause any of the harmful effects listed in this Chapter.

G. At the conclusion of the hearing, the Architectural Board of Review shall vote in public whether to approve or disapprove the proposed Construction. Four votes shall be required to disapprove any proposed Construction; any other action can be taken by a concurrence of the majority of Architectural Board of Review members in attendance at the hearing.

H. The Building Commissioner shall notify, in writing, the applicant either in person or by certified or registered mail, return receipt requested, of the Architectural Board of Review's decision. Such notice shall also state that the applicant has the right to appeal the decision to the Board of Trustees.

I. If the proposed Construction is approved, a building permit shall not be withheld on the basis of any provision of this Chapter.

9-15-6 Right to Appeal concerning Construction Project.

A. In the event the Architectural Board of Review disapproves a proposed Construction project, the applicant shall have the right to appeal the decision directly to the Board of Trustees.

B. An appeal from a decision of the Architectural Board of Review must be filed in writing with the Village Administrator within 10 days after the applicant is served with written notice of the Architectural Board of Review's decision.

C. Upon the filing of an appeal, the Village Administrator shall notify the Village President, who shall set a date for hearing the appeal. Such hearing date shall be no later than 30 days after the filing of the appeal.

D. After a hearing date has been established, the Village Administrator shall notify, in writing, the applicant either in person or by certified or registered mail, return receipt requested, at least 7 days before the hearing. The notice shall state the time and place of the hearing.

E. Upon the filing of an appeal, the Village Administrator shall prepare for submission to the Board of Trustees a written summary of the proceedings from the architectural review hearing. The Village Administrator shall also notify the Building Commissioner and chairperson of the Architectural Board of Review of the appeal, who shall forward all records and materials regarding the application to the Board of Trustees. The foregoing shall constitute the record on appeal and shall be delivered to the Board of Trustees before the hearing date on the appeal.

9-15-7 Hearing on Appeal regarding Construction Project.

A. At the hearing on appeal, the Board of Trustees shall permit the applicant to present any additional evidence relating to the proposed Construction. The Board of Trustees may also consider testimony from the Building Commissioner, members of the Architectural Board of Review, or surrounding property owners.

B. At the conclusion of the hearing, the Board of Trustees shall consider the record on appeal, the testimony presented on appeal, and any other evidence and determine whether the Architectural Board of Review's decision is consistent with the architectural review standards set forth in this Chapter. The Board shall then vote on whether to affirm or reverse the decision of the Architectural Board of Review.

C. To reverse the decision of the Architectural Board of Review in whole or in part, the affirmative vote of at least four members of the Board of Trustees shall be required. Any other action on appeal may be taken by the concurrence of a majority of Trustees present.

D. The Village Administrator shall notify, in writing, the applicant either in person or by certified or registered mail, return receipt requested, of the Board's decision on appeal. Such notice shall state that the Board's decision is final.

9-15-8 Administrative Review. Any final decision by the Board of Trustees pursuant to this Chapter may be further appealed in accordance with the Administrative Review procedures of the Illinois Code of Civil Procedure, as it may be amended from time to time.

9-15-9 Standards of Review. In considering whether any proposed Construction will produce any of the harmful effects set forth in this Chapter, the Building Commissioner, the Architectural Board of Review, and the Board of Trustees, as the case may be, shall consider whether there exists one or more of the following features:

Excessive similarity or dissimilarity of design and appearance in relation to any other existing building or structure, or a building or structure for which a permit has been issued, within a distance of 300 feet of the subject property, or in design and appearance generally prevailing in the area, of the Subject Property, in respect to one or more of the following features:

A. Facade;

B. Size and arrangement of either doors, windows, porticoes or other openings or breaks in the facade facing the street, including a reverse arrangement thereof;

C. Cubical contents;

D. Gross floor area;

E. Other significant design features, such as, without limitation, roof line, height of building, construction, material, or quality of architectural design; or

F. Location, orientation or elevation of building, parking, storage or refuse areas upon the subject property.

9-15-10 Application to Pending and Prior Building Permits. The provisions of this Chapter, as hereby amended, shall not be deemed to require any change in the plans or construction of any new or existing building in the event that:

A. A full and complete building permit for Construction of a building or structure in any residential zoning district (as opposed to a permit for the demolition of a building or structure or the construction of a foundation) was lawfully issued prior to the effective date of the ordinance amending this Chapter; and

B. Such permit had not by its own terms expired prior to such effective date; and

C. Construction pursuant to such permit is commenced prior to the expiration of such permit and within 180 days of such effective date and is diligently pursued to completion.

#9122653_v6

# 9122653_v7